DOPPLER SYSTEMS

DDF7000 (MPT)

USER'S MANUAL

Doppler Systems LLC / PO Box 2780 / Carefree, AZ 85377
Revision A: July 19, 2013
Revision B: October 17, 2013
Revision C: June 26, 2015
Revision D: July 30, 2017
Revision E: January 17, 2020
Revision F: May 4, 2020

CONTENTS

Figures

WARRANTY INFORMATION

Doppler Systems will repair or replace, at their option, any parts found to be defective in either materials or workmanship for a period of one year from the date of shipping. Defective parts must be returned for replacement. In the US, contact the factory, or overseas your local distributor, for advice about returning any defective parts or equipment.

If a defective part or design error causes your radio direction finder to operate improperly during the one-year warranty period, Doppler Systems will service it free of charge if returned at owner's expense. If improper operation is due to an error on the part of the purchaser, there will be a repair charge.

Doppler Systems are not responsible for damage caused by the use of improper tools or solder, failure to follow the printed instructions, misuse or abuse, unauthorized modifications, misapplication of the unit, theft, fire or accidents. This warranty applies only to the equipment sold by Doppler Systems and does not cover incidental or consequential damages. Doppler Systems radio direction finding equipment is designed to for locating interfering radio signals. It is not intended for use as a navigation aid, and in particular it is not to be used for aircraft or marine navigation.

Chapter 1

INTRODUCTION

The Series 7000 is a high performance radio direction finding system that operates using the synthetic Doppler principle in which a circular array of antennas are combined in a way that simulates a single element rotating in a circular path. As the simulated element approaches the wave front of an RF signal, the frequency increases due to the Doppler effect, and as it recedes from the transmitted source, the frequency decreases. The amount of frequency change (deviation) is related to the speed of rotation and the diameter of the antenna array, while the modulation frequency is equal to the frequency of rotation (the antenna sweep frequency). When connected to a narrow band communication receiver, the sweep frequency is present on the audio output. To obtain the bearing angle, the direction finder processes this audio output.

Many features are present in the Series 7000:

- The system may be used with either an 8-element high accuracy fixed site antenna or a 4-element magnetic mount antenna for mobile operation.
- The sweep frequency may be set to 250, 500, 1000 or 2000 Hz to avoid tone frequencies that may be present in the signal modulation.
- Advanced signal processing is used to detect the signal with the receiver either squelched or unsquelched. Signals as short as 80 msec can be detected.
- The sweep direction automatically reverses from clockwise to counterclockwise to compensate for asymmetries in the receiver.
- An internal audio amplifier and loudspeaker output are provided for monitoring the signal, and a sharp notch filter removes the sweep frequency for clarity.
- Two host USB ports allow for direct connection of USB receivers and other USB devices.
- An Ethernet connection allows the direction finder to be easily networked via the Internet or an Intranet.
- Sturdy antenna construction will survive wind loads up to 120 mph (60 mph with ½ inch of ice buildup)
- Audio can be streamed from the direction finder to the computer over the Ethernet.
- Wide bandwidth biconical antennas provide excellent sensitivity throughout the entire operational frequency band.

- Designed to work with standard commercial narrow band FM receivers
- Highly configurable allowing for autonomous operation and multiple networking options
- Master-Slave configuration allows up to 32 frequencies to be monitored simultaneously using one antenna.

Chapter 2

SPECIFICATIONS

DF Method	Synthetic-Doppler with patented "Smooth Summing"
Frequency Range	125 - 1000 MHz
Accuracy	1 deg rms (8 element antenna) 2.5 deg rms (4 element antenna)
Resolution	0.1 deg
Sampling Rate	2 samples per second (adjustable)
Sensitivity	-123 dBm
Averaging	Adjustable from 1 to 20 samples
RF pulse detection	80 ms minimum
Commutation frequency	Adjustable (250, 500, 1000, 2000 Hz)
Voltage Range	11 - 14 VDC
Interfaces	2 USB Host Ethernet (RJ45) Receiver audio and RSSI 3.5 mm Speaker Out
Power	7.2 W @ 12 VDC (processor and one antenna)
Temperature Range	-40 °C to 85 °C (antenna) 0 °C to 70 °C (processor)
Dimensions	7.3" x 3.5" x 1.13" (processor)
Weight	0.75 lbs (processor)
CE Compliant	Per EN 61000-6-2, EN 61000-6-4 AND EN 301 489-1

Chapter 3

MOBILE ANTENNA INSTALLATION

Note: ***Do not place the direction finder antennas near a transmitting antenna. Transmitting too close to the DF antennas can cause catastrophic damage to the summing unit.***

Four antenna elements are used for mobile operation. At frequencies below 500 MHz, magnetically mounted quarter wave whips are used. These antennas must provide a good coupling to the ground plane, and must be of exactly the same type. It is especially important that the coaxes used have the same length. Doppler Systems antennas DDF7061 and 7062 use the same magnetic mount base and cover the frequency ranges 88-136 and 136-500 MHz respectively. Cut the whips to resonance using the chart provided with the antennas and space them approximately 1/8 to 1/4 wavelength apart on the car's roof. (See table for spacing recommendation)

Antenna Spacing Recommendation

Frequency Range (MHz)			
Low	High	Spacing (in)	Spacing (cm)
100	120	23.7	60.2
120	144	19.8	50.2
150	180	15.8	40.2
180	220	13.1	33.2
220	250	11.1	28.1
250	300	9.5	24.1
300	360	7.9	20.1
360	430	6.6	16.8
430	500	5.6	14.2

Note: T*o avoid damage to the input circuitry used in the RF summer, touch the antenna ground plane before attaching the whips to the magnetic mounts.*

It is important that the vehicle provides at least 1/4 wavelength of ground plane outboard of the antennas.

Place the RF summer (DDF7080) on the car with the cables oriented towards the rear of the car. Connect the magnetic mount antenna cables to the corresponding TNC connectors on the RF summer. (That is, the left front antenna to the left front connector, etc. See Figure 1.) Locate the summer near the back of the car (e.g. the lid of the trunk) so that the magnetic mount antenna cables do not have excessive slack. Secure the four antenna cables together with nylon ties so that they are

not free to move around and touch the antenna elements. Route the control and RF cables through a rear window. For mobile operation in the 700-1000 MHz band, antenna DDF7064 should be mounted directly on top of the RF summer. This antenna provides an extended ground plane, a wind shroud, and four stub type antennas built into TNC connectors. Place the assembled RF summer/antenna in the center of the car roof. Be sure to use the safety strap provided with the DDF7064 antenna.

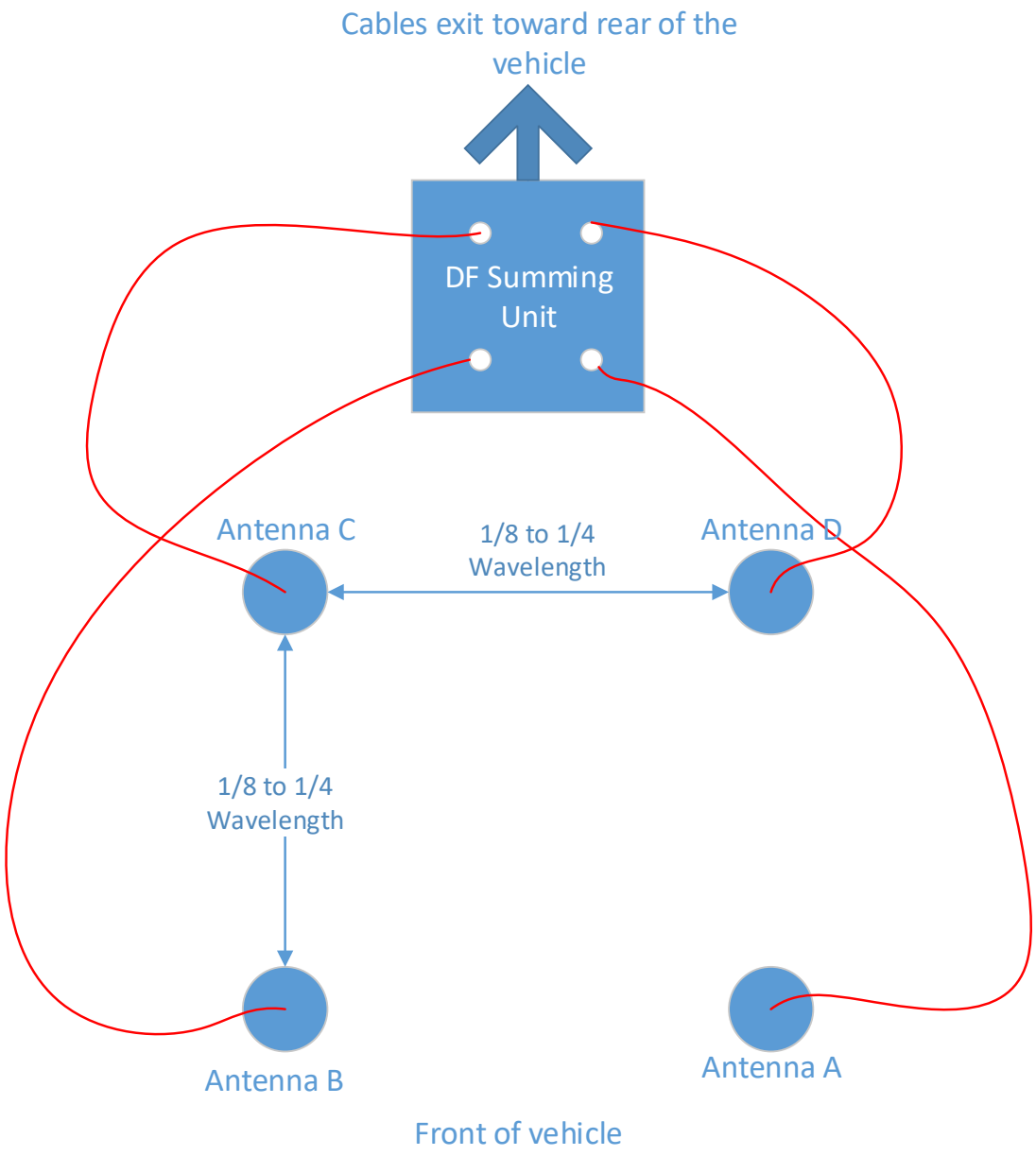

Figure 1: Arrangement of Mobile Antennas

The photos below show typical installations.

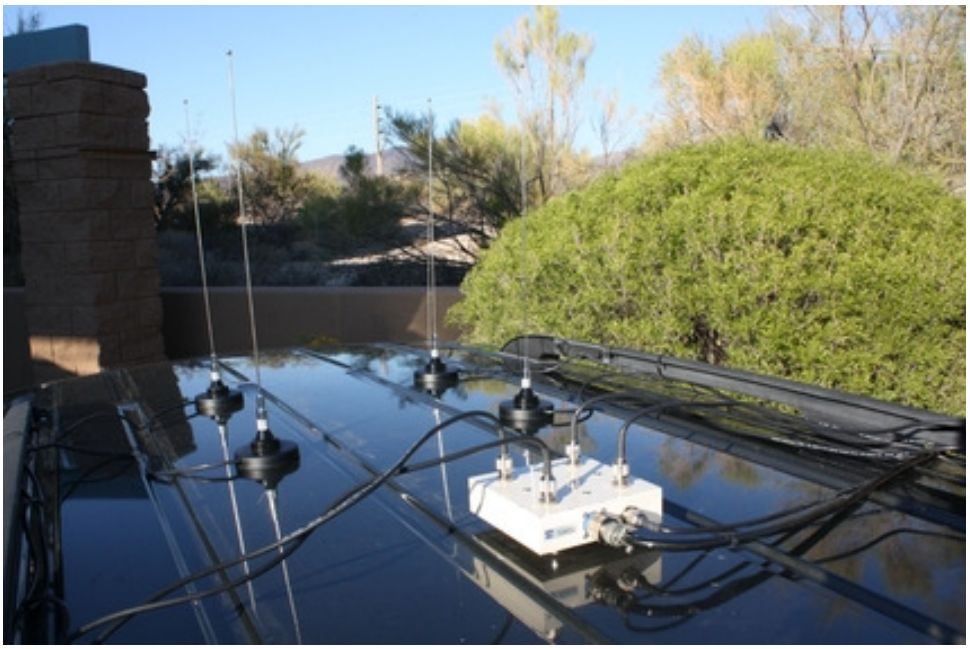

Figure 2: VHF Mobile Antenna Installation

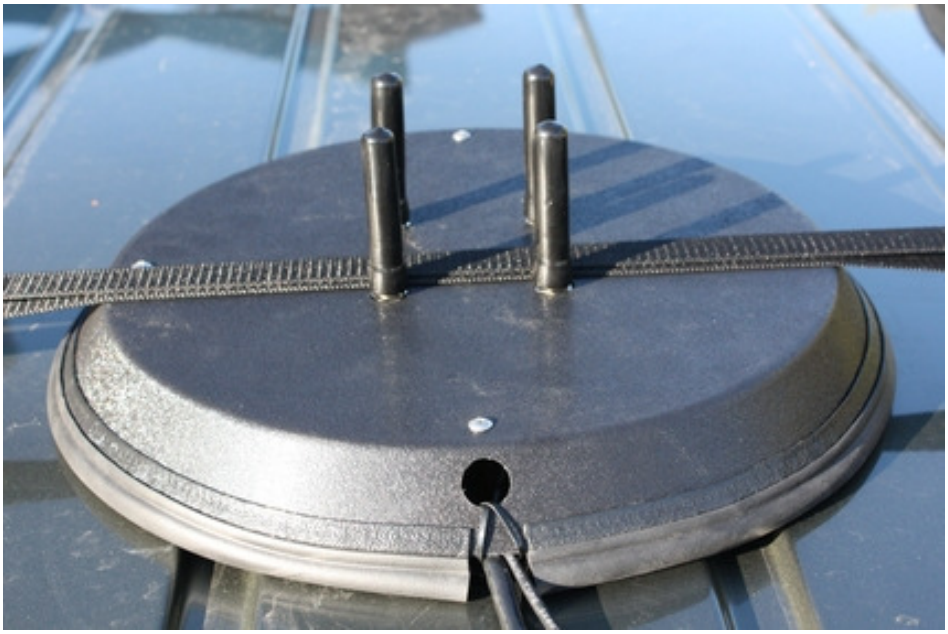

Figure 3: THF Mobile Antenna Installation

Chapter 4

FIXED SITE ANTENNA ASSEMBLY

Fixed site antennas are shipped unassembled. This section provides assembly instructions.

IN THIS CHAPTER

ANTENNA MOUNTING LOCATION

For optimum results it is necessary to mount the fixed site antenna as high as possible above the average terrain. It is also required that the antenna be mounted at the top of any metallic structure (tower) so that there is no metal in the antenna pattern. Do not mount the antenna near any transmitting antenna. Serious damage can occur if large RF fields are applied to the antenna. See the application note "***In-band Interference from a Nearby Transmitter***" available on our web site www.dopsys.com for more information.

SINGLE BAND ANTENNA INSTALLATION

This section details the assembly of a single band fixed site antenna. The photographs are for a VHF antenna but all the antennas use identical mounting hardware.

MOUNTING THE MAST TO THE ANTENNA

All of the antenna assemblies come with a bottom mast, an antenna frame, and antenna elements.

- At the base of the antenna frame there are 5 longer screws protruding from the bottom connector plate as shown in the photo below. Remove these screws and lock washers. **Do not remove the 3 other screws.**

Figure 4: Remove the longer cap screws to install the lower mast

- Next position the bottom mast to fit over the connectors and drain plug and fasten the mast to the antenna frame using the screws and lockwashers from step 1. The figure below shows the mast connected to the frame.

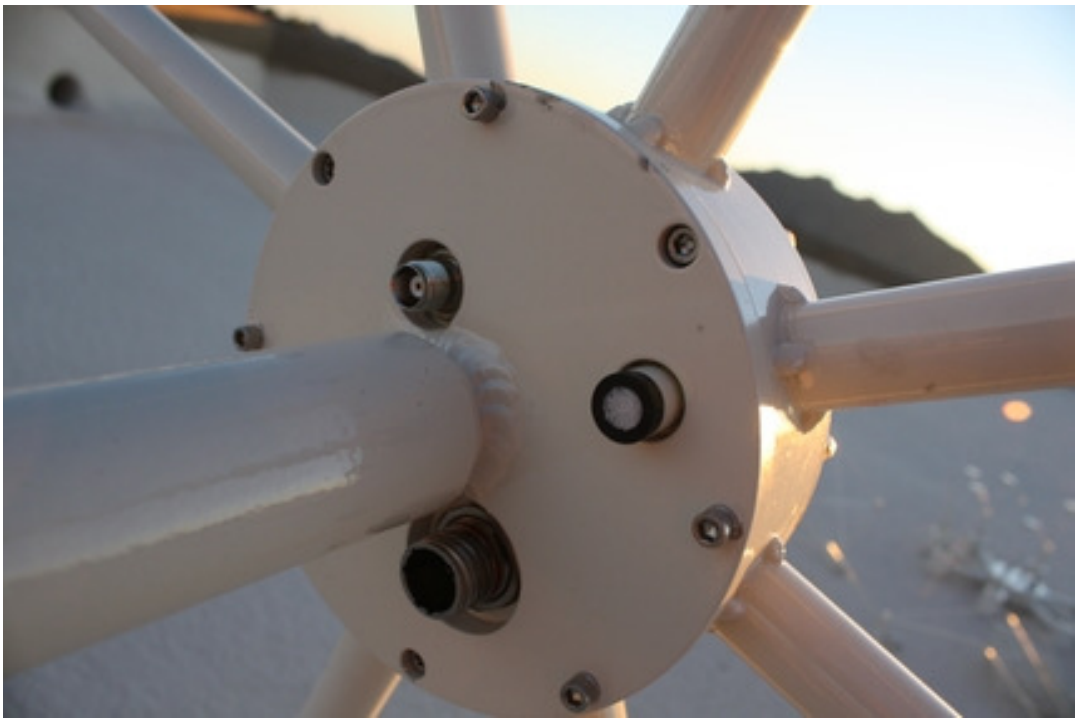

Figure 5: Secure the lower mast to the frame using the cap screws

ATTACHING THE BOTTOM MAST TO YOUR MAST

The fixed site antennas are furnished with a mast clamp for installation on a pipe or pole. The diameter of the pipe or pole can be between 1.25 in. and 3.5 in. The figure below shows how the mast clamp is installed.

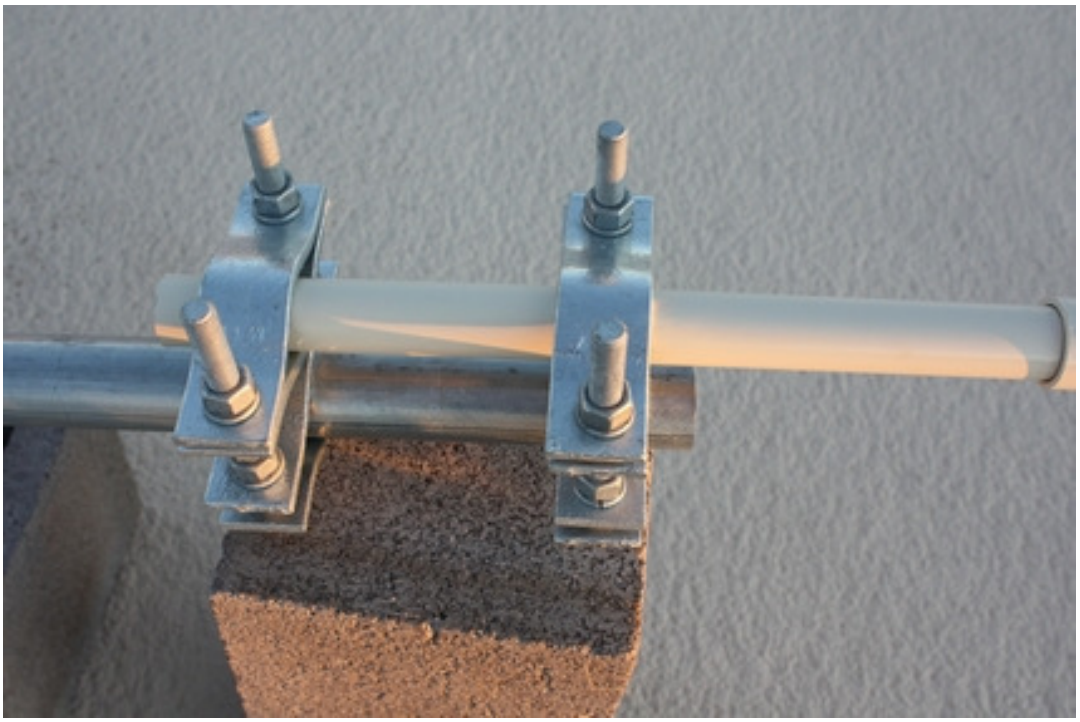

Figure 6: Attach the lower mast to your mounting mast with the mast clamp

ATTACHING THE CABLES

Unroll the control and coax cables being careful not to damage the ferrites or to crimp the coax. Be careful to keep the connectors clean from dirt. Fasten the control cable by aligning the key and turning the outer locking ring until it just meets the red line on the mating connector. Fasten the TNC connector until it is tight. Use cable ties to fasten the cables to the masts.

At this point the assembly should look similar to the photo below.

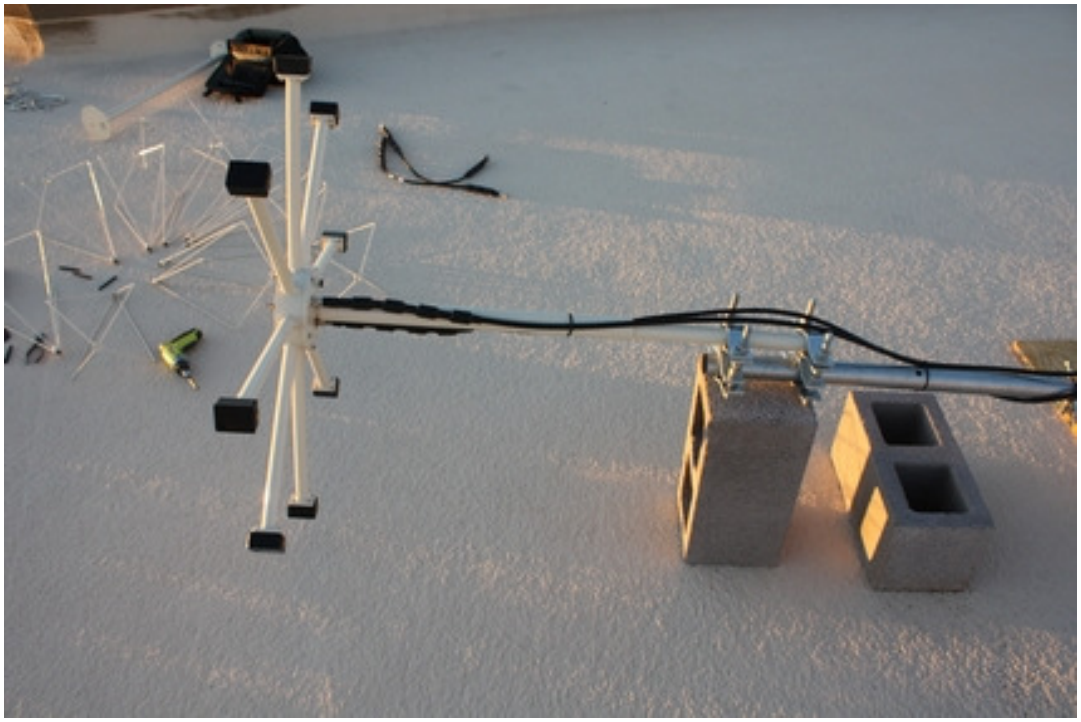

Figure 7: VHF antenna frame mounted on mast

ATTACHING THE ELEMENTS

Four Wire Biconical Antennas

The antenna elements are mounted to baluns at the end of the frame arms using an o-ring, a 5/16-24 cap screw, and a lock washer. The arrangement of the hardware is shown in the photo below.

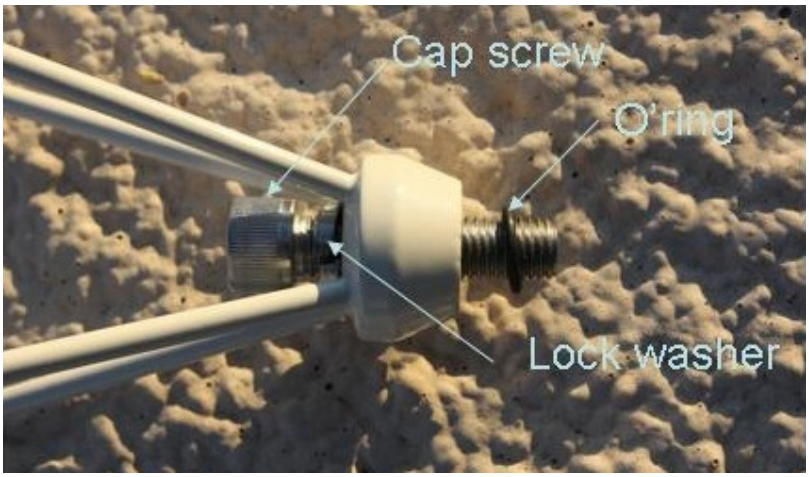

Figure 8: Arrangement of the antenna element mounting hardware

Three Wire Biconical Elements

The antenna elements are mounted to baluns at the end of the frame arms using a 5/16-24 cap screw, a flat washer and a rubber washer. The arrangement of the hardware is shown in the photo below.

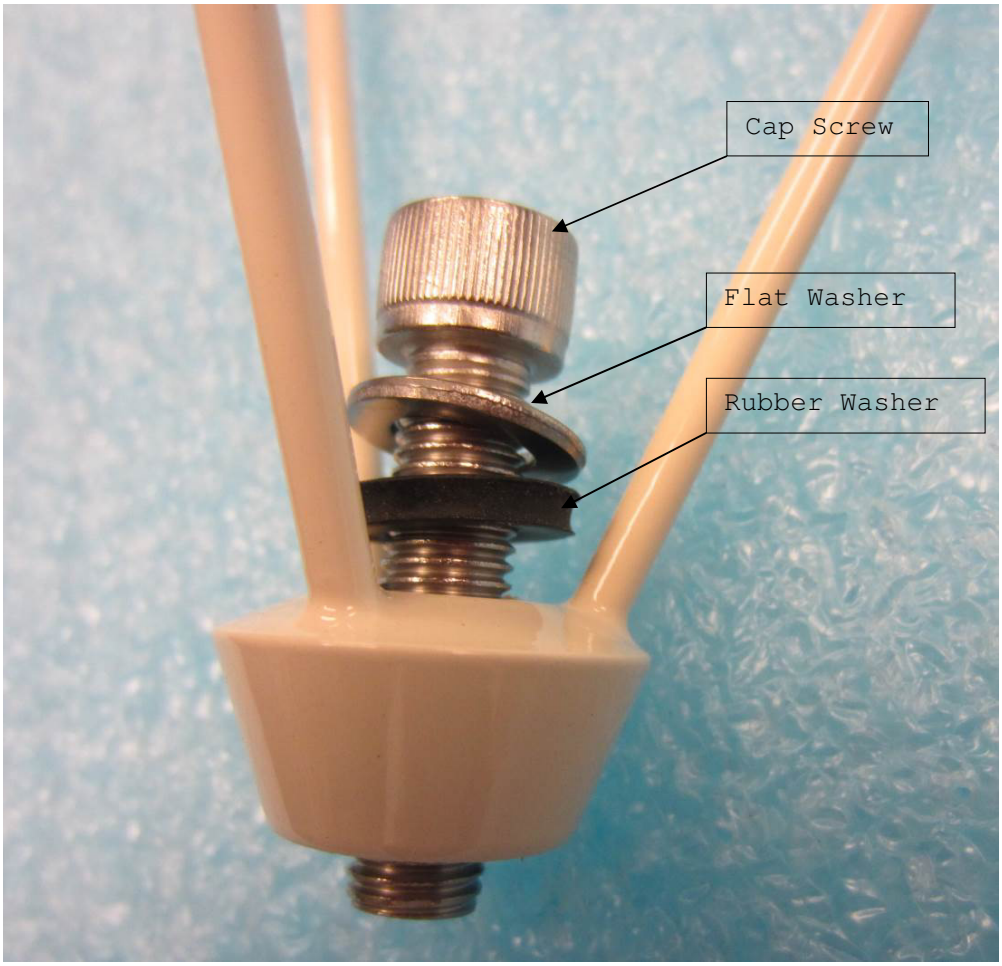

Figure 9: Three Wire Element Mounting Arrangement

Thread the cap screw into the balun being careful not to cross thread the screw. Tighten the cap screw until the lock washer is fully compressed. Do not over tighten the cap screw or the brass threads in the balun may be stripped. Mount all sixteen elements. Align the biconical elements so that all elements are symmetric. The photo below shows two elements connected to the balun.

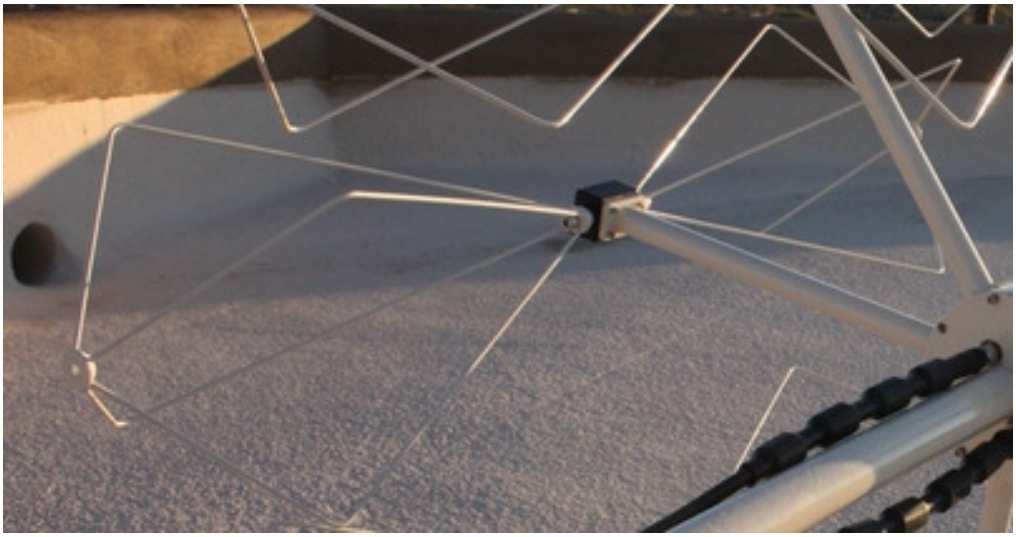

Figure 10: Antenna element mounted on the balun

After all the elements are attached the antenna is ready to be erected. The assembled antenna will look similar to the photo below.

Figure 11: Fully Assembled VHF Antenna

TWO BAND ANTENNA INSTALLATION

To assemble the two band antenna perform the steps detailed above; however, before attaching the antenna elements install the connecting mast and cables. The connecting mast is installed similarly to the base mast using the 5 longer screws and lock washers at each end. When installing the coaxial cable make sure the end of the cable with the most ferrite beads is connected to the lower antenna. The photo below shows the connecting mast with the connecting cables attached to the top of the VHF antenna.

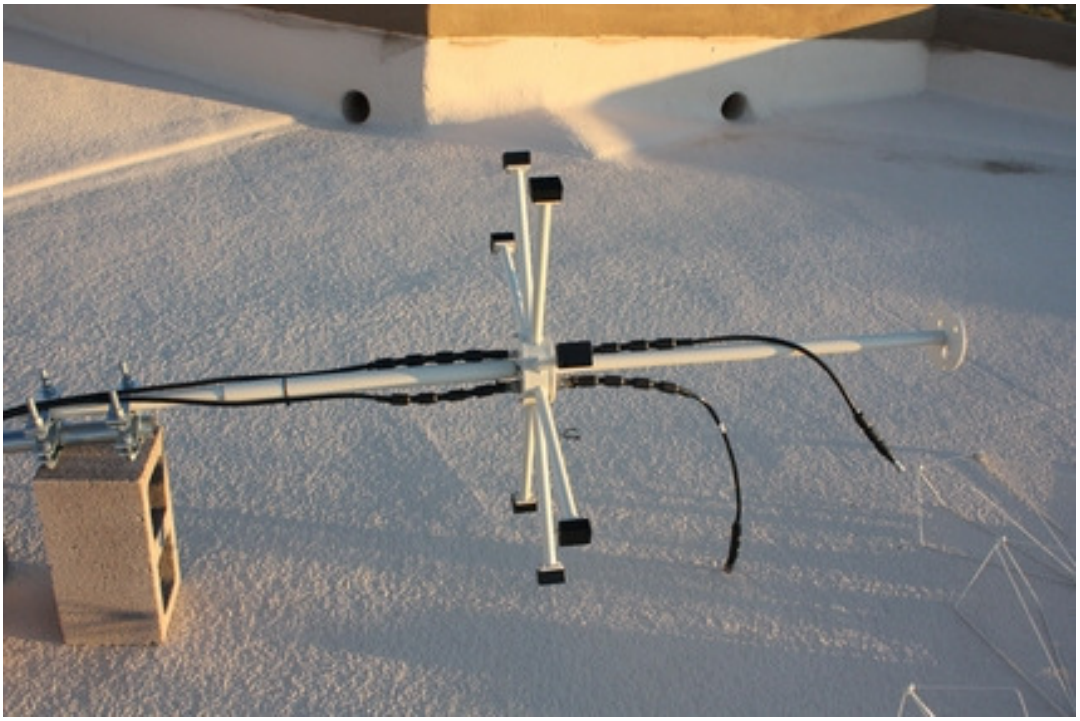

Figure 12: Connecting mast and cables installed for two antenna installation

Next connect the UHF antenna frame to the coupling mast, connect the cables, fasten them with cable ties, and then install the antenna elements on both VHF and UHF frames. The completed antenna stack is shown below.

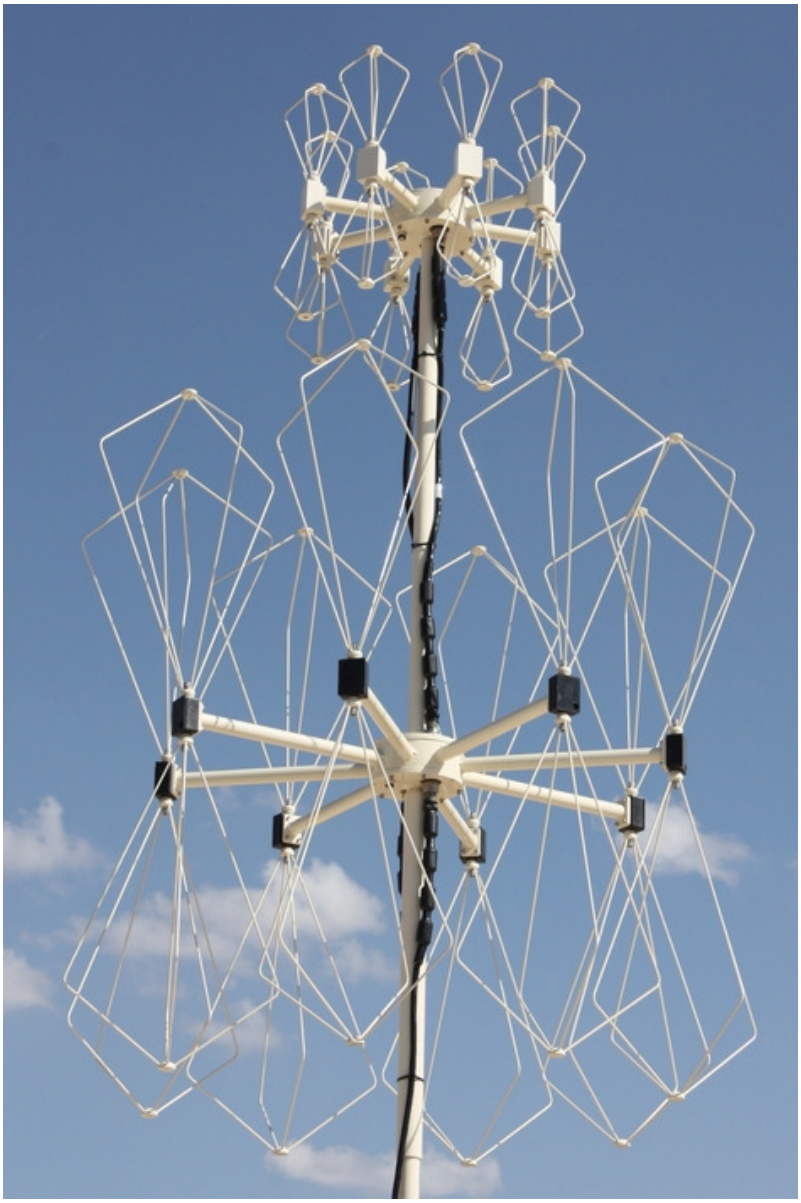

Figure 13: Assembled UHF-VHF Antenna

THREE BAND ANTENNA INSTALLATION

Follow the steps above to install the three element antenna and simply install the third antenna using the short connecting mast supplied.

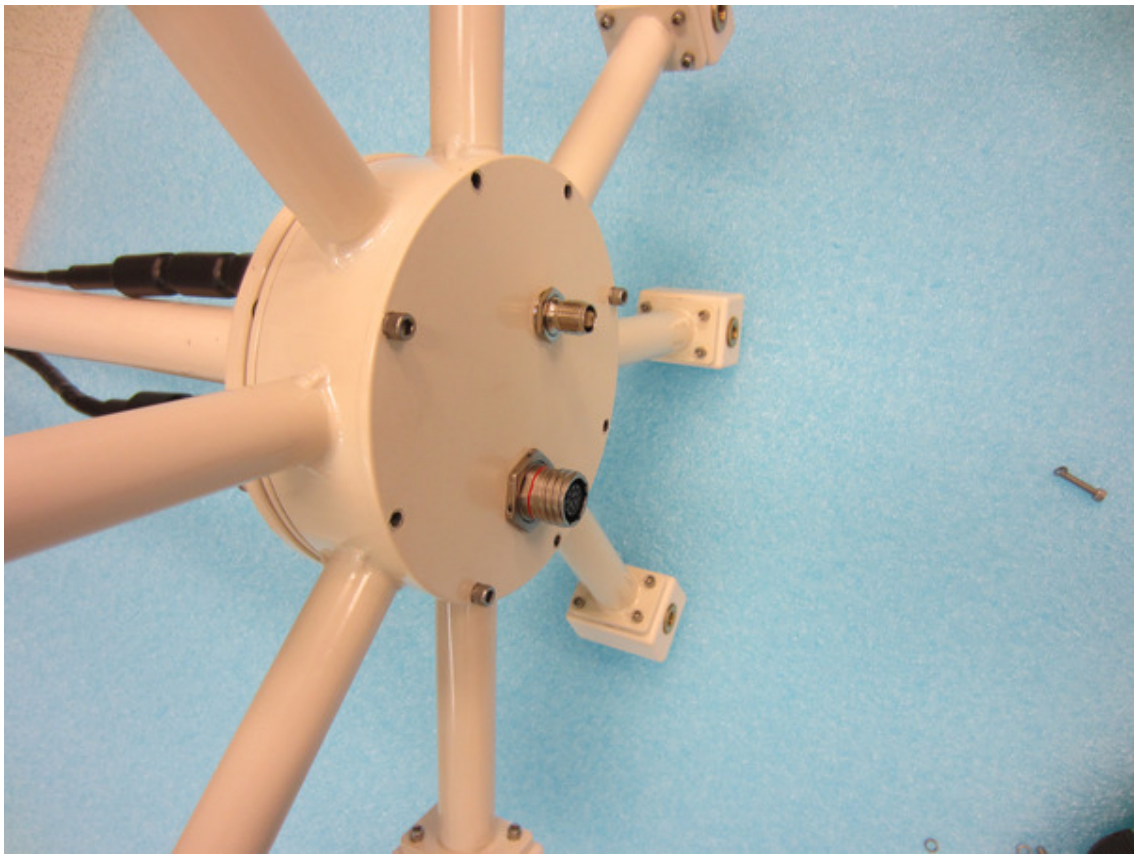

Figure 14: UHF Antenna Frame Installed on Mast

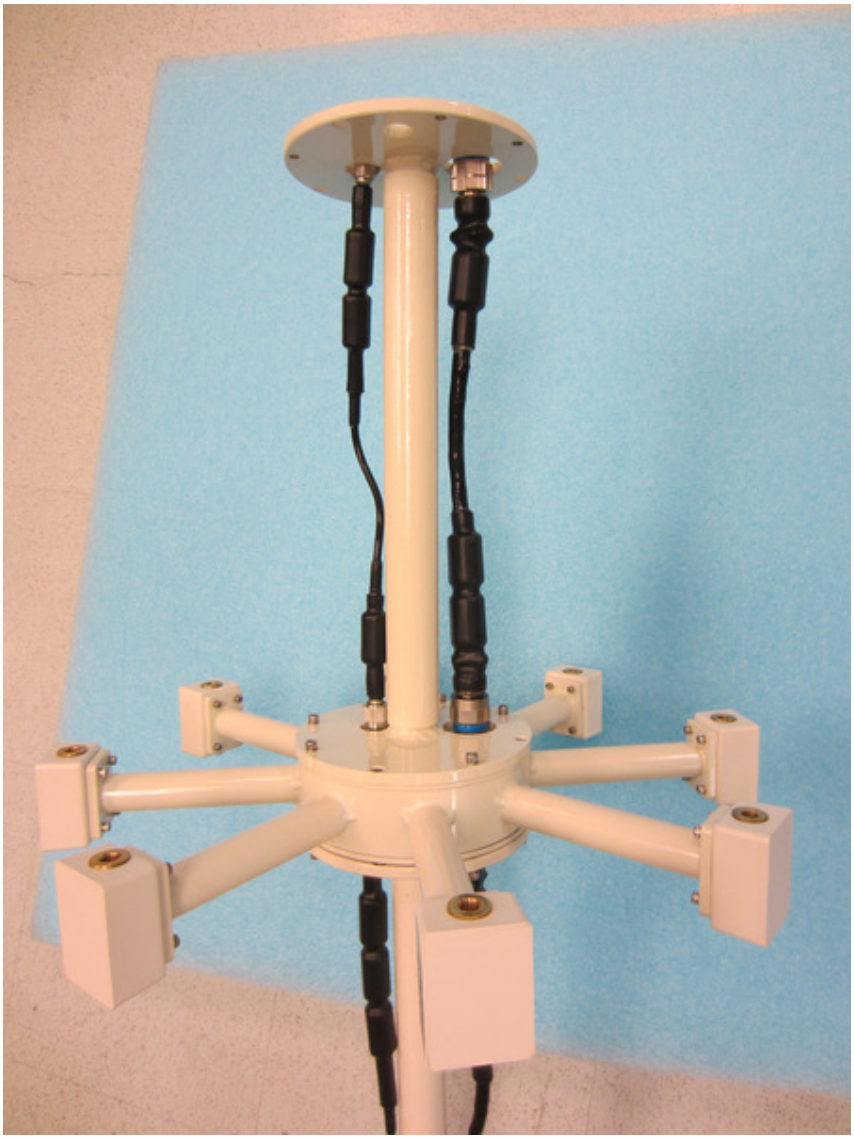

Figure 15: UHF to THF mast with cables

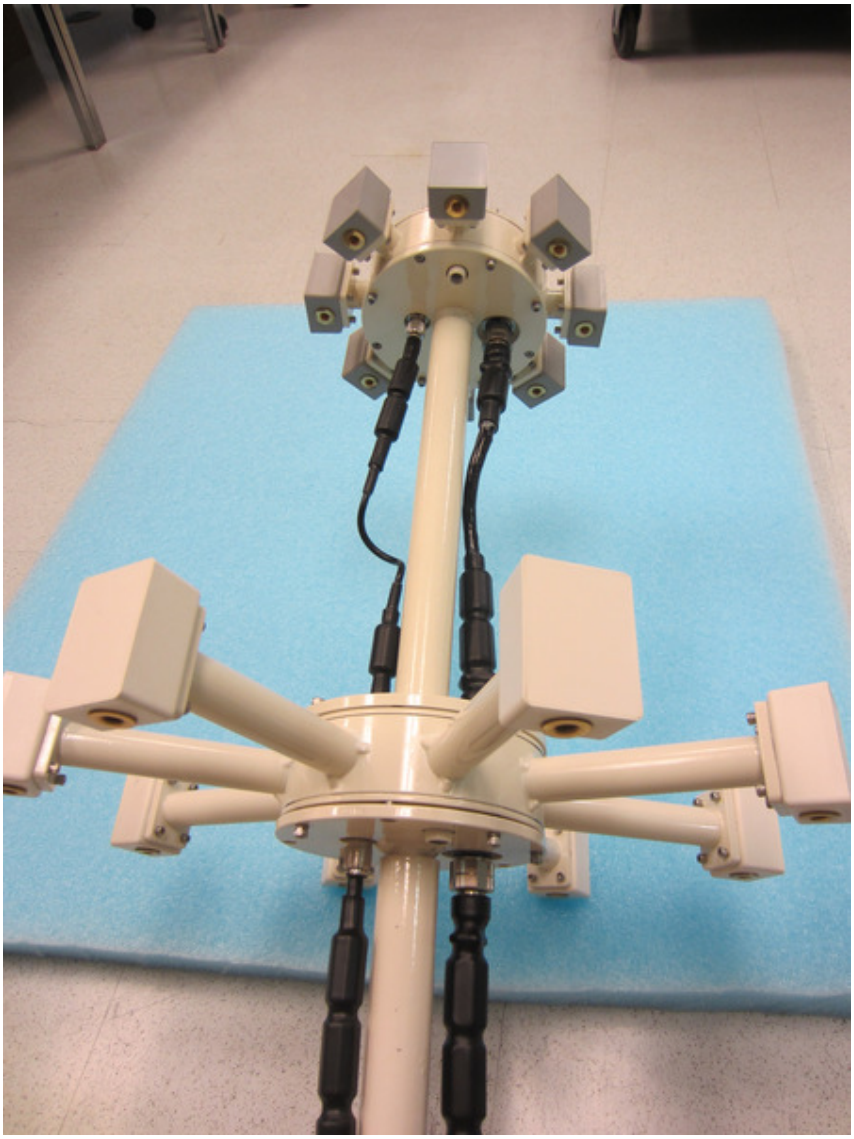

Figure 16: THF Antenna Frame Installed

There are two styles of THF elements. One style of elements mount similar to the other elements except that they have longer cap screws. The other style shown in Figure 16 below have a rubber washer installed to preload the elements and to keep moisture out of the threads. Do not over tighten the elements or you may strip the brass inserts in the balun.

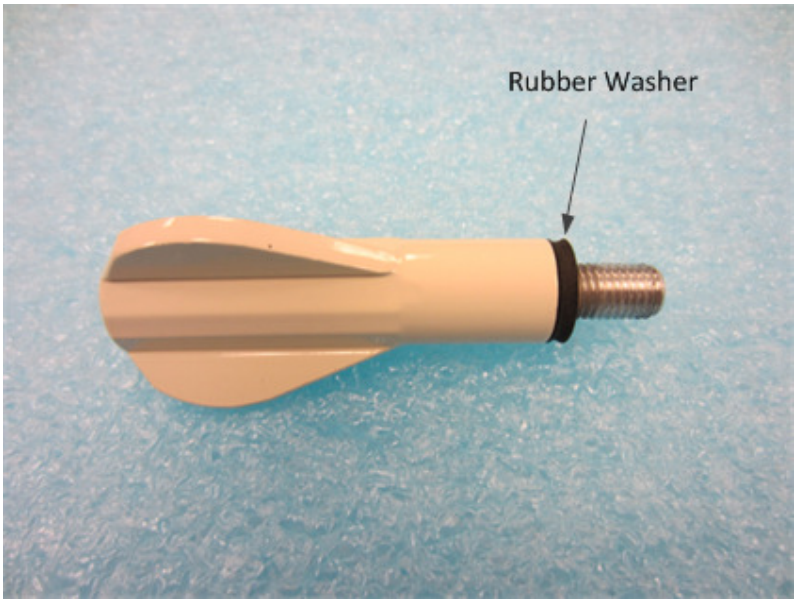

Figure 17: THF Element mounting hardware

The final assembly will look like the photo below.

Chapter 5

MARINE BAND ANTENNA ASSEMBLY

This chapter describes the assembly and installation of the four element marine band antenna.

IN THIS CHAPTER

SELECTING A LOCATION FOR THE ANTENNA

In order for the direction finding system to achieve its specified accuracy it is necessary for the antenna to be mounted in a proper location. The antenna should be top mounted on a mast or tower and in a location where there is no metal in the antenna pattern. Do not mount the antenna near any transmitting antenna. Serious damage can occur if large rf fields are applied to the antenna. See ***http://www.dopsys.com/appnotes/Interference.html***
http://www.dopsys.com/appnotes/Interference.html for more information.

MOUNTING THE MAST TO THE ANTENNA

At the base of the antenna frame there are five longer screws protruding from the bottom connector plate as shown in the photo below. Remove these screws and lock washers and set them aside. Be careful not to lose them.

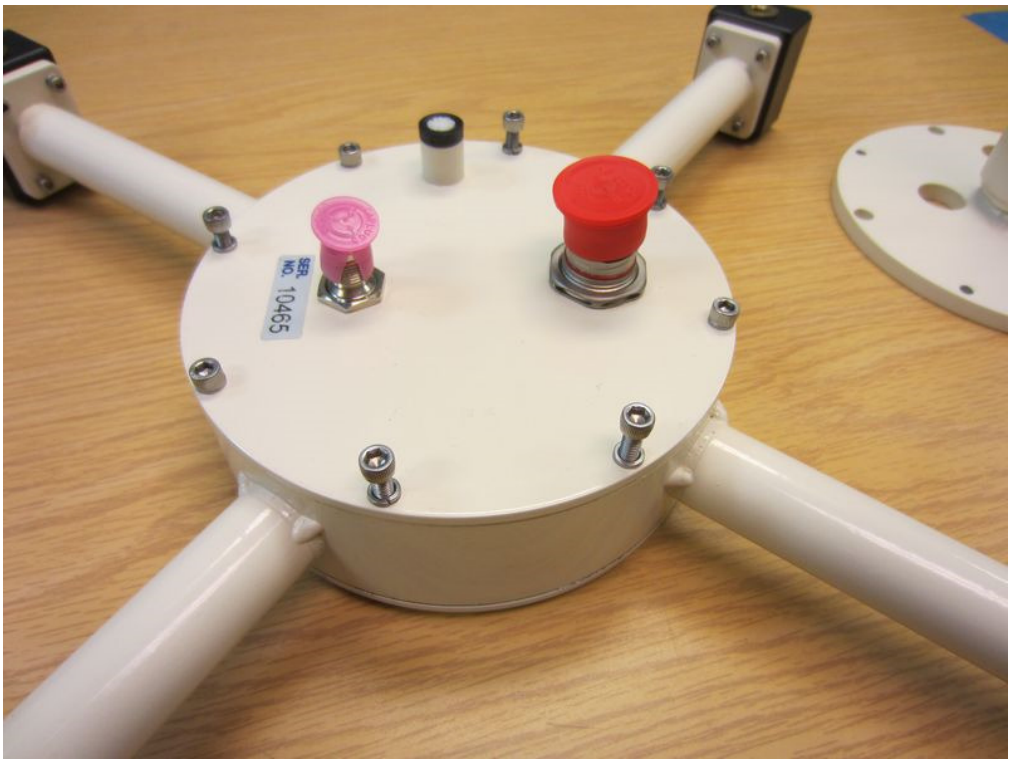

Figure 18: Remove long screws from the base and set them aside

Place the mast on the bottom of the antenna and use the long screws to secure the mast to the base as shown below.

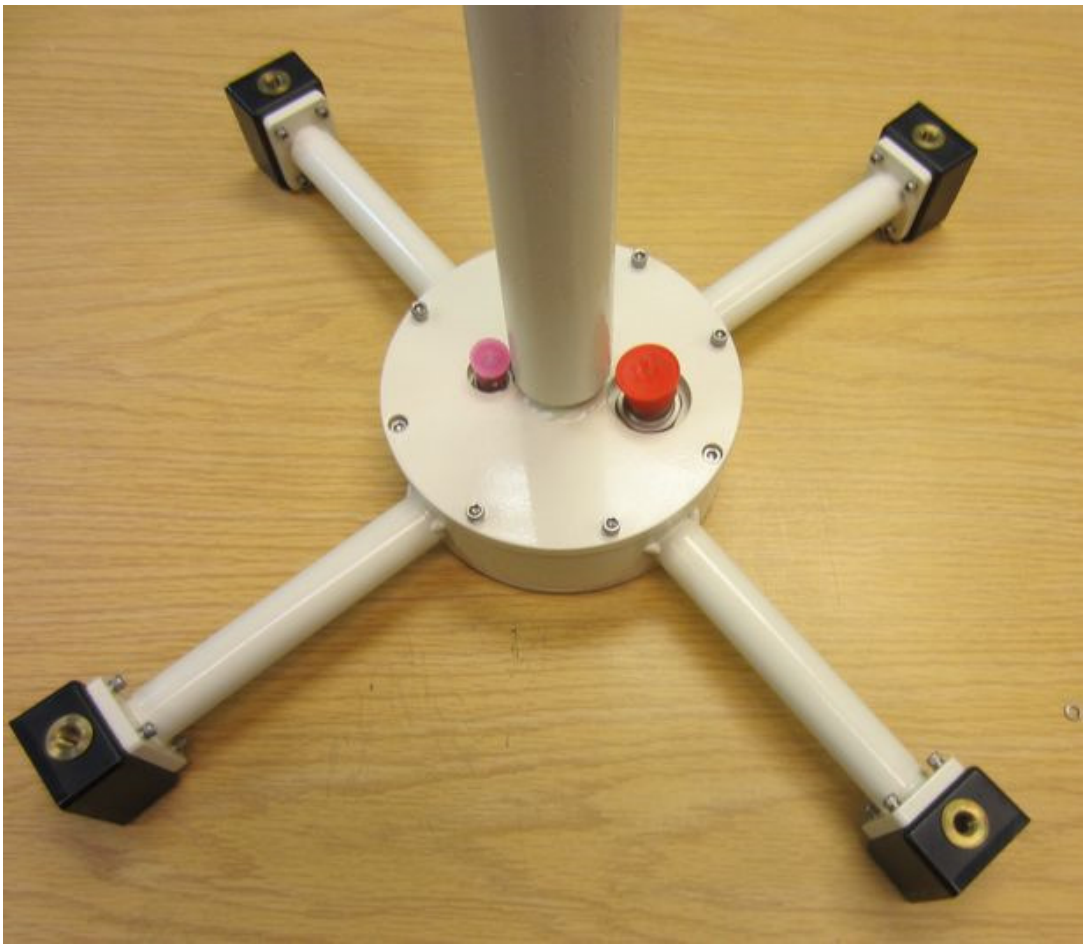

Figure 19: Install the base mast on to the antenna using the long screws

ATTACHING THE ANTENNA MAST TO YOUR MAST

The antenna is furnished with a mast clamp for installation on a pipe or pole. The diameter of the pipe or pole can be between 1.25 in. and 3.5 in. The figure below shows how the mast clamp is installed.

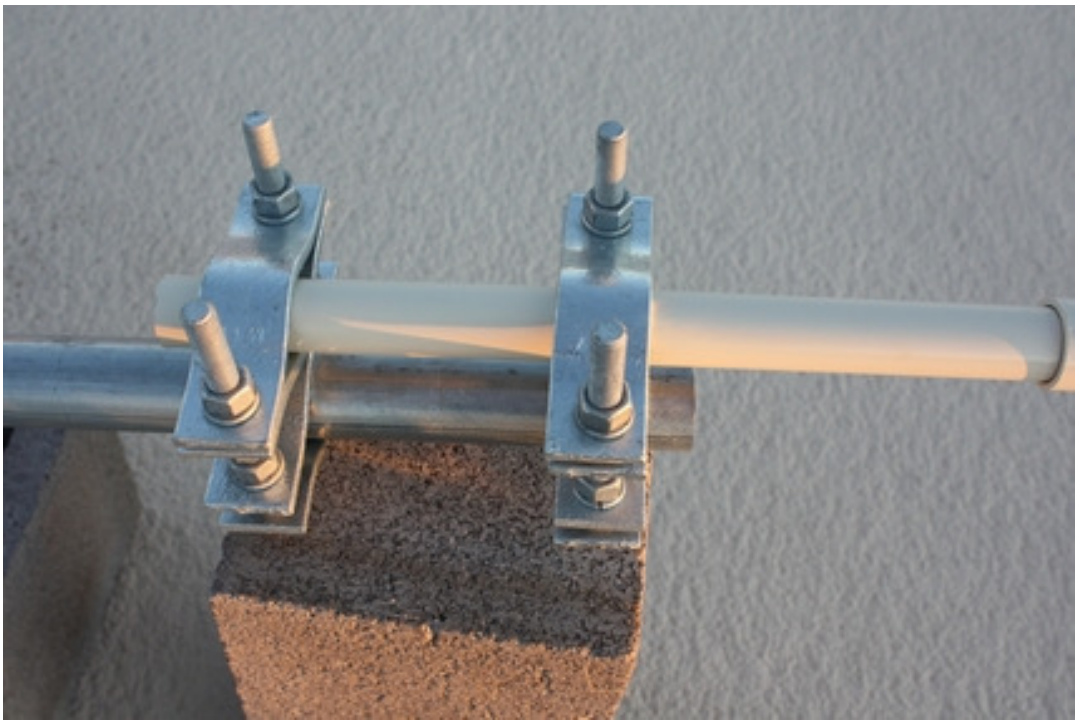

Figure 20: Attached the lower mast to your mounting mast with the mast clamp

When positioning the antenna on the boat make sure the arrow on the top of the antenna is pointing to the bow of the boat.

MOUNTING THE ELEMENTS AND CONNECTING THE CABLES

There are eight vertical antenna elements. Each element has a threaded insert. Screw the threaded inserts into the baluns (black boxes) at the end of the antenna arms. Tighten the elements so that the o'ring at base of the antenna is compressed. Connect the cables to the proper connectors. The coaxial cable can sometimes be a little difficult to connect. Simply wiggle it back and forth lightly while tightening it. The photo below shows the antenna with the elements installed and cables attached.

Figure 21: Assemble marine antenna

Chapter 6

DDF7001 PROCESSOR CONNECTIONS

The DDF7001 processor requires a 12 V power supply, a loud speaker or headphones, a receiver, and a Windows based computer. This section will detail the wiring and setup of the DDF7001 processor for the various supported receivers, GPS receivers, and the compass. The figure below identifies the various DDF7001 connectors.

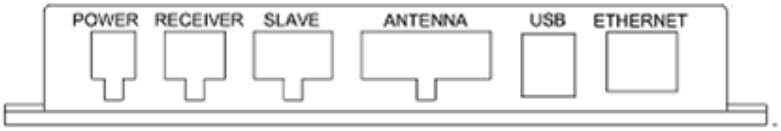

Figure 22: DDF7001 Connectors

The following block diagrams illustrate a number of typical configurations for the DDF7001.

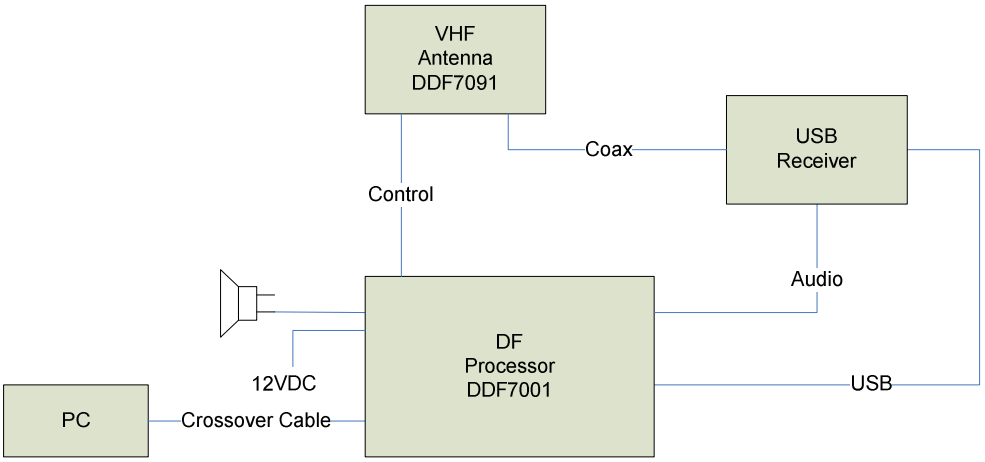

Figure 23: Single Antenna Fixed Site DF Installation

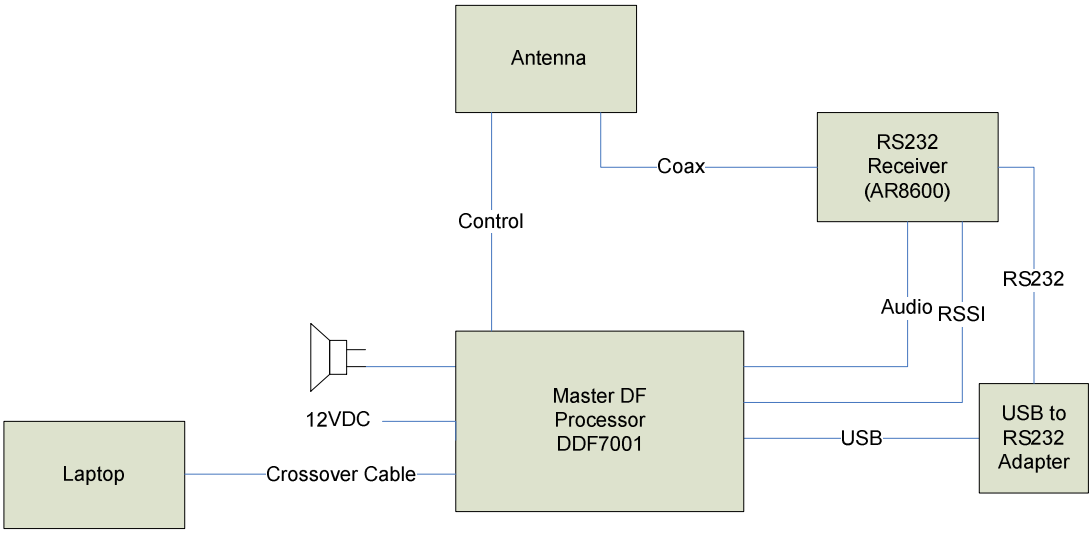

Figure 24: Direction Finder with RS232 receiver

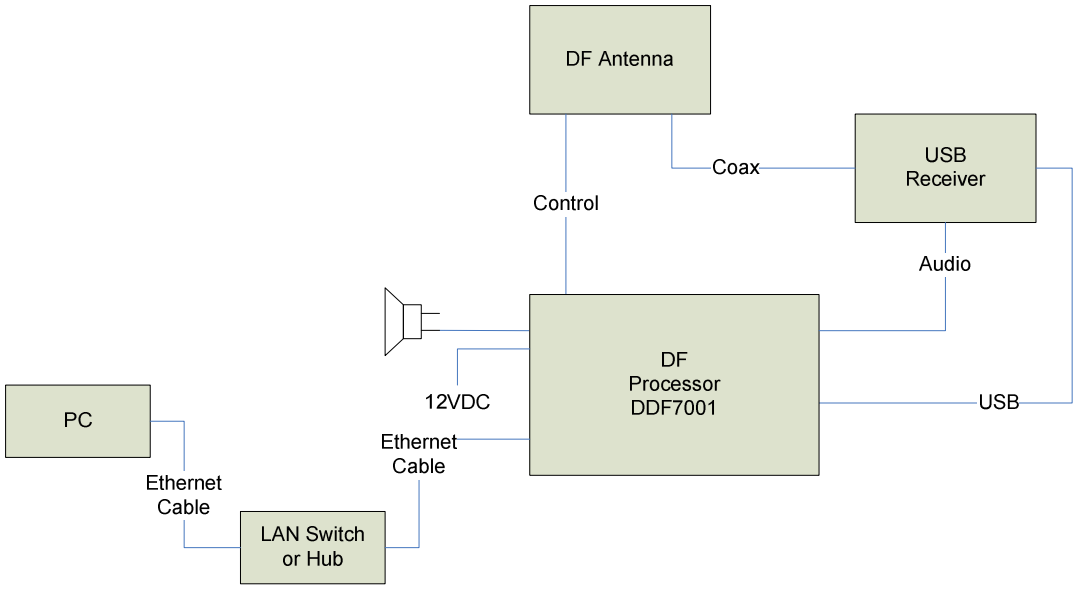

Figure 25: Single Antenna Fixed Site System with LAN Connection

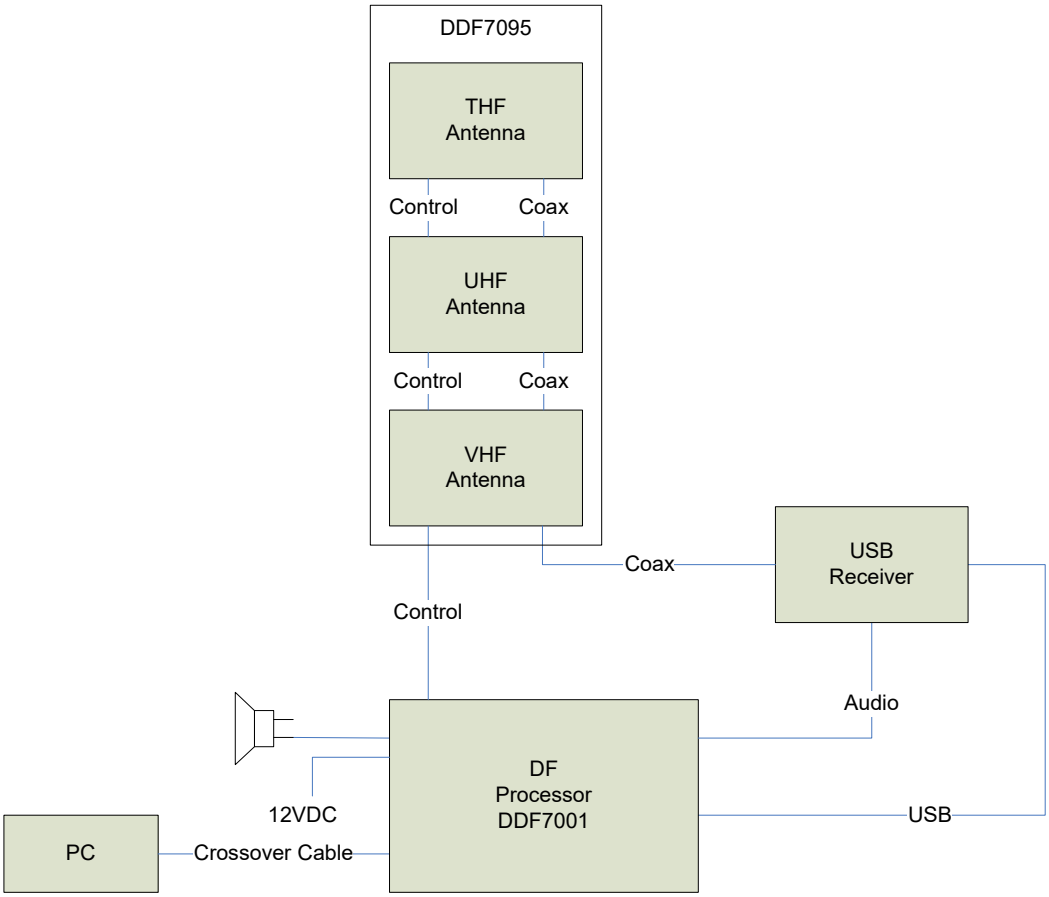

Figure 26: Three Antenna Fixed Site Installation

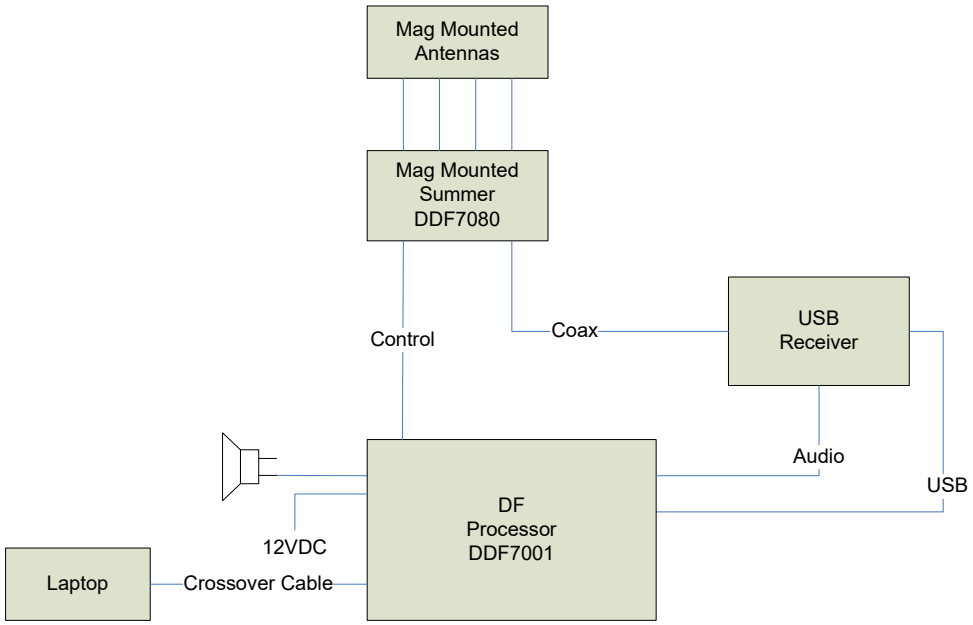

Figure 27: Basic Mobile Installation for Homing

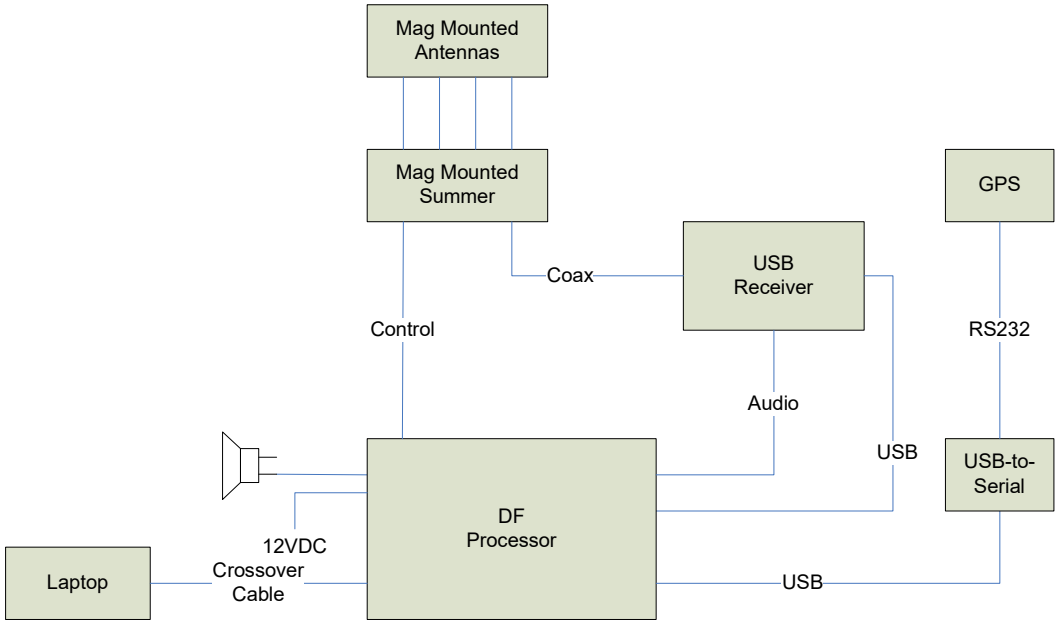

Figure 28: Mobile Installation with GPS

IN THIS CHAPTER

POWER AND SPEAKER CONNECTION

A power and speaker cable is furnished with the DDF7001. The speaker output supports a standard 8 ohm speaker. The unit is to be powered with an 11 - 14 V dc source. A schematic of the power cable is shown below.

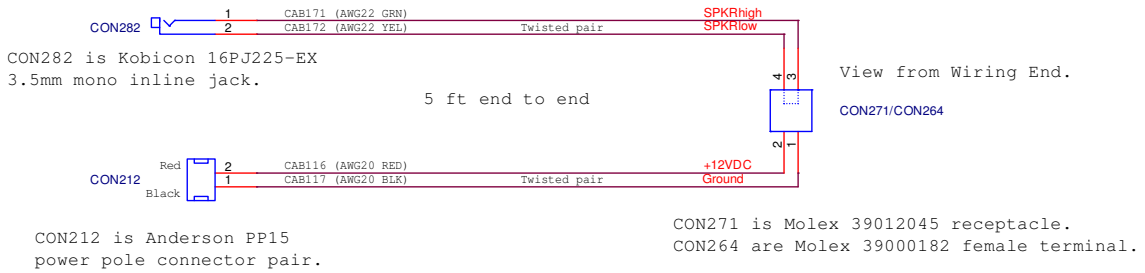

Figure 29: Power and Speaker Connections

As shipped, the audio output is configured for a single ended drive with the SPKRlow at ground. If desired, the output may be reconfigured for bridge drive by moving the jumpers on headers J13 and J14 to pins 2-3 instead of pins 1-2. The advantage of bridge drive is that the power output is doubled, but the disadvantage is that approximately 2.5 VDC is present on both SPKRhigh and SPKRlow and these leads must be kept isolated from ground. J13 and J14 are located adjacent to the input power connector inside the DDF7001 processor.

RECEIVER CONNECTION

The receiver cable supplied with the DDF7001 is connected to the 6 pin connector labeled Receiver. The phone plug on the end of this cable connects to the external speaker output of the receiver. This input is DC isolated from ground so either a single ended or a bridge type receiver audio output may be connected to the DDF7001. The input impedance is 10 ohms as supplied. However, if you need a high impedance input, remove the jumper on J1 adjacent to the receiver connector inside the DDF7001 processor.

If your receiver has an RSSI analog output, connect it to the blue wire, RSSI Input, with the white wire grounded to the receiver. Additionally, you must connect the coaxial cable from the DF summing unit to the receiver antenna input.

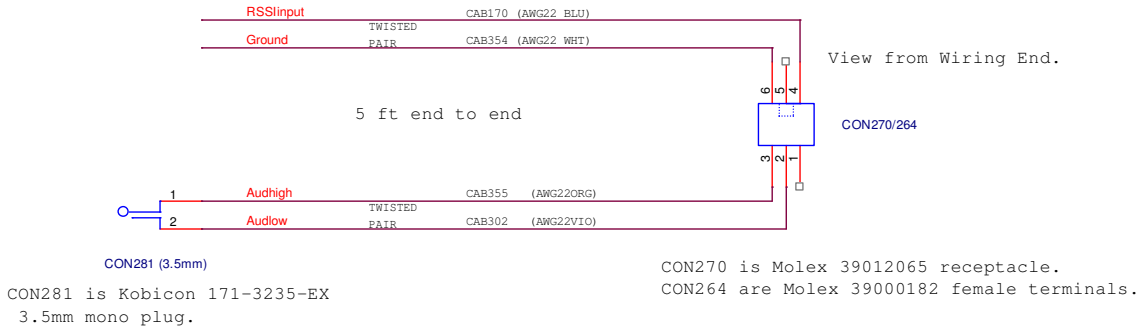

Figure 30: Receiver Connections

RECEIVER CONTROL

For the USB receivers connect the USB cable provided with your receiver to either of the USB host ports on the DDF7001. For receivers that require a serial port you need to connect a USB-to-Serial converter to one of the USB host ports and then connect the receiver to the serial port. See the ***USB-to-Serial Converter*** section of this manual for further information.

COMPUTER CONNECTION

The DDF7001 can be connected to a network via a network hub or switch, or it can be directly connected to the computer's network interface.

CONNECTING TO A NETWORK

To connect the DDF7001 to a network simply connect a standard CAT5 or CAT6 network cable to the DDF7001 and to a switch, hub, or router on your network as depicted in the figure below.

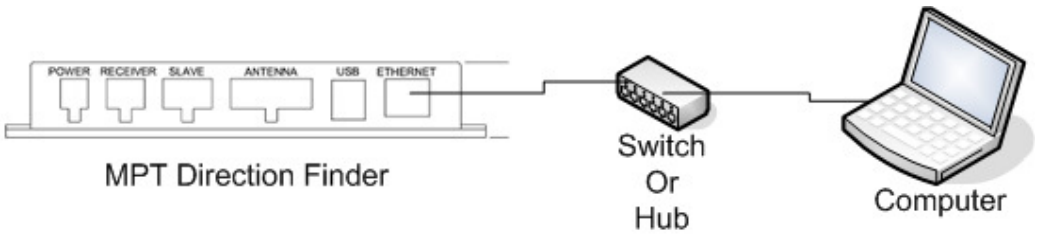

Figure 31: Connection into a network with a switch, hub, or router

The Ethernet software in the DDF7001 ships with a DHCP client enabled, so if connected to a network that supports DHCP, the DDF7001 will obtain an IP address from the DHCP server. Once it has done this it begins broadcasting its IP address on the network as a UDP broadcast message on port 9007.

This message is broadcast once every 2 seconds.

A Windows based program, Doppler DF Discover, is provided with the DDF7001 unit and will display the IP address, the port number and the MAC address of the device as shown below. Note the IP address because it is used to connect the browser and the Telnet interface to the DDF7001. The latitude and longitude fields will be filled in if a GPS is connected to the direction finder.

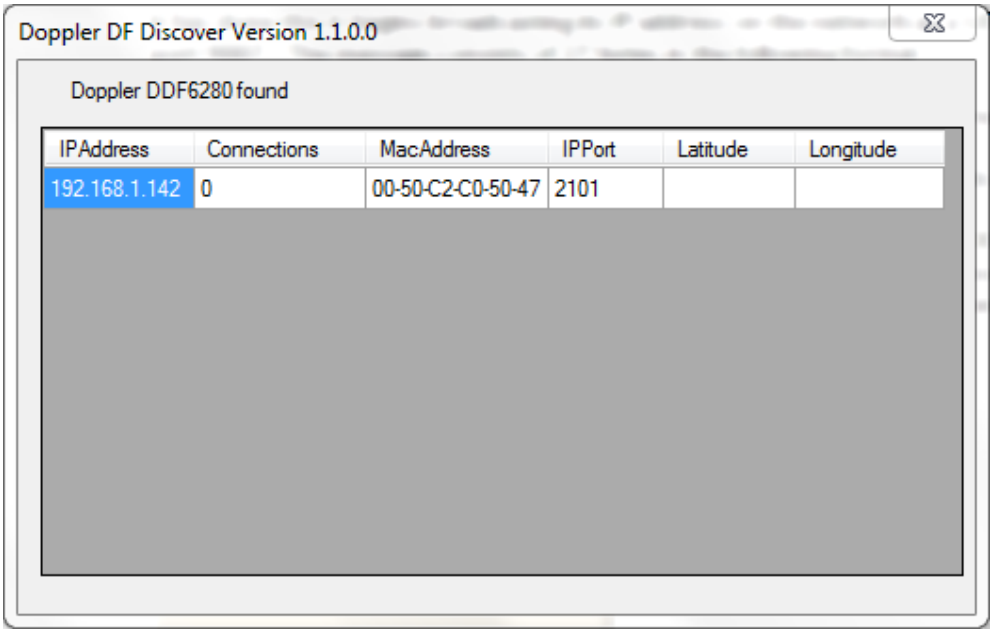

Figure 32: Doppler DF Discover will display all direction finders connected on a LAN

CONNECTING DIRECTLY TO A PC

The DDF7001 may also be connected directly to the computer using a crossover cable as shown below.

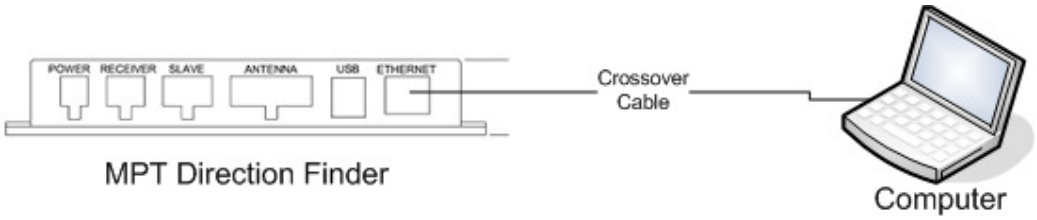

Figure 33: Direct connection with crossover cable

The DDF7001 is shipped with a default IP address of 10.0.0.100. If you are going to connect it directly to your computer you must set your computer TCP/IP properties as shown in Figure 34 below. Once it is connected you can use the web server or the MPT User Interface software to change the IP address and the IP port number.

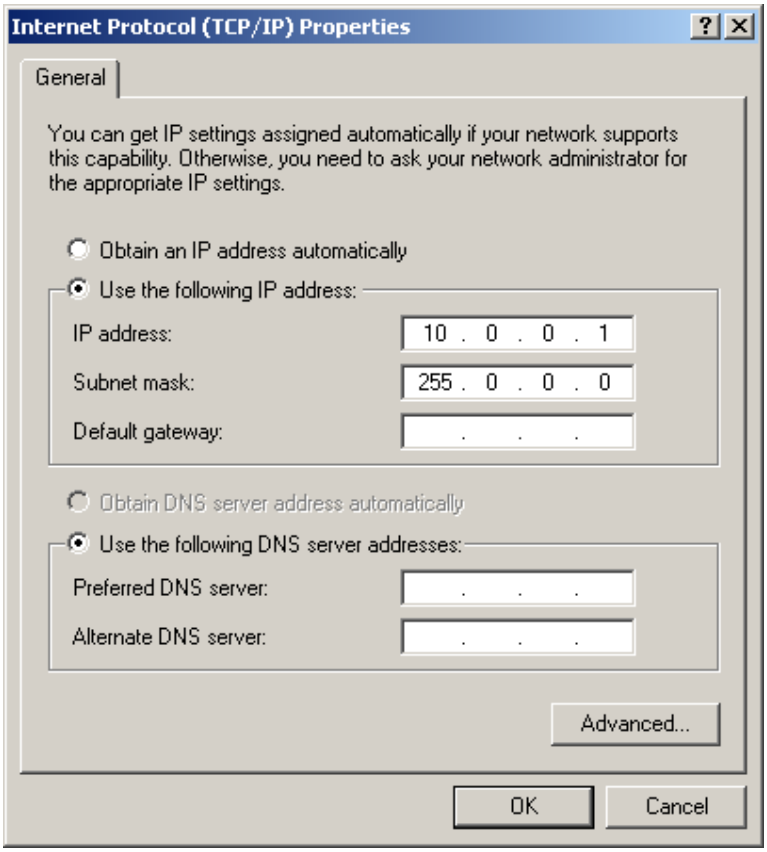

Figure 34: Network Interface Setup in Windows

Chapter 6

CONNECTING USB DEVICES TO THE DDF7001

The DDF7001 has two USB ports that enable the user to interface a variety of devices to the direction finder. The following devices are supported in the firmware.

- ICOM R1500 Receiver
- ICOM R2500 Receiver
- ICOM R8600 Receiver
- AOR SR2200 Receiver
- AOR DV1 Receiver
- EasySync USB2-H-1004 4 port USB-to-Serial Adaptor
- EasySync ES-U-1001-B10 1 port USB-to-Serial Adaptor
- Doppler Systems DDF6074 GPS Receiver (with serial adaptor)
- Doppler Systems DDF6075 Compass (with serial adaptor)
- Doppler Systems DDF7057 Self-Test Generator
- Doppler Systems DDF7056 Yaw Rate Sensor
- AOR AR8600 (with serial adaptor)
- AOR AR5000 (with serial adaptor)
- ICOM R8500 (with serial adaptor)
- ICOM R9500 (with serial adaptor)
- Most USB-to-Serial converters that use the FTDI chip set
- Most USB-to-Serial converters that use the Prolific chip set

USB-TO-SERIAL CONVERTERS

USB-to-Serial converters are used for

- interfacing serial receivers like the ICOM R8500 or AOR AR5000
- connecting NMEA based devices such as a GPS receiver or a compass
- connecting any serial device to the DDF7001

The DDF7001 supports up to a 4 port Prolific or FTDI chip set based USB-to-serial converters. It is best to connect the converter prior to powering the DDF7001. Once the converter is detected by the USB driver the MPT UI program can be used to configure the serial ports. The ports will default to the NMEA mode if no other selection is made.

RECEIVER

If a serial receiver is selected port 0 will be configured for that receiver. This can be overridden using the MPT User Interface program to set the receiver port to any serial port. For the receivers supported by the DDF7001 the Set Frequency (0x0014), the Set Squelch (0x0015), and the Set Rx Volume (0x0016) commands set the frequency, squelch, and receiver volume. Other commands to the receiver can be passed to it using the Receiver pass through command (0x0017).

NMEA

If a serial port is configured as an NMEA port, the $ at the beginning of the message is stripped and the NMEA message is forwarded with its identifier.

GENERAL SERIAL DEVICE

If the serial port is configured as a general serial device then data is sent to the serial port using the Serial Pass through (0x0026) command and data is received from the serial port via the Serial Port Data (0x0026) response.

NMEA DEVICES

GPS receivers and compasses used with the DDF7001 output NMEA standard GGA, VTG, and HDM messages. These devices are connected to the DDF7001 via a USB-to-serial converter. See the ***USB-to-Serial Converter*** section of this manual for further information on using USB-to-serial converters.

DDF7056 YAW RATE SENSOR

The DDF7056 Yaw Rate Sensor is used to provide a faster update of the heading in mobile applications where the vehicle is performing frequent turns. This device outputs an NMEA message; however, its baud rate is 38.4 k. Therefore, the MPT User Interface software must be used to set the baud rate to 38.4 k prior to using the yaw rate sensor.

USB RECEIVERS

The DDF7001 currently supports the ICOM R1500, ICOM R2500, ICOM R8600, ICOM R30, AOR SR2200, and the AOR DV1 USB based receivers. The DDF7001 configures the receiver to receive narrow band FM transmissions required for the direction finder to work properly. Currently only frequency, squelch, and receiver volume setting is implemented; however scan commands are supported within the Doppler TargetTrack applications that make use of the receiver command pass through feature.

To use the AOR DV1 and ICOM R8600, the audio input to the DDF7001 must be reconfigured. The following steps describe this conversion

Remove the 4 screws holding the base and remove the base
Remove the jumper shown in the figure below and set it aside
Reinstall the base using the 4 screws.

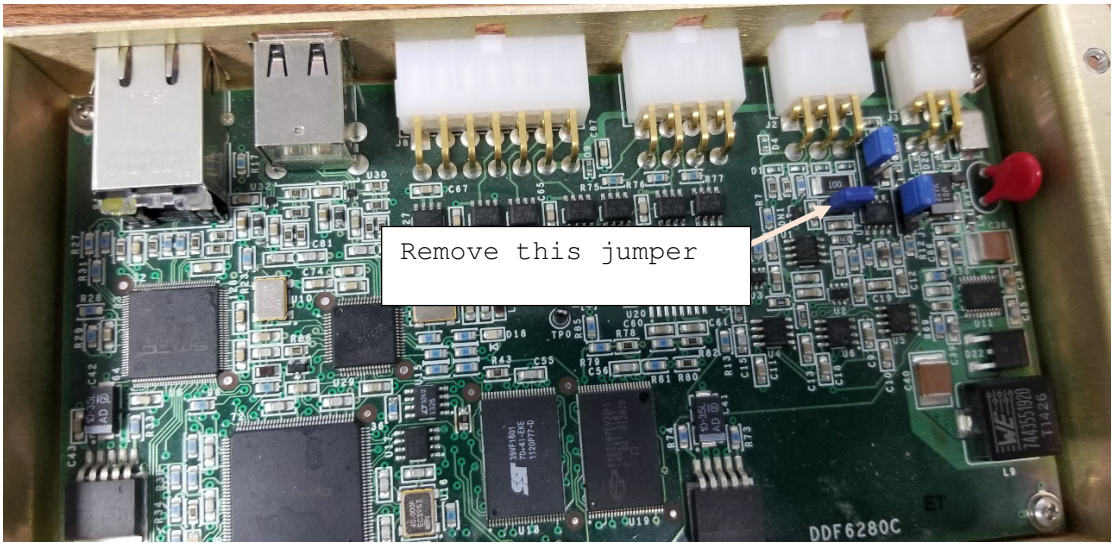

SERIAL RECEIVERS

The DDF7001 currently supports the ICOM R8500, ICOM R9500, AOR AR8600, and the AOR AR500 RS232 commanded receivers. The DDF7001 configures the receiver to receive narrow band FM transmissions required for the direction finder to work properly. Currently only frequency, squelch, and receiver volume setting is implemented; however scan commands are supported within the Doppler SignalTrack and TargetTrack applications that make use of the receiver command pass through feature.

USE OF RECEIVERS NOT SUPPORTED BY THE FIRMWARE

It is possible to use receivers that are not supported by the direction finder's firmware and software. Any narrow band FM receiver or scanner can be used. Connect the audio output (normally the external speaker jack) to the Audio Input of the direction finder (see Figure 26).

If you desire an S meter output from the direction finder firmware and the receiver has an analog S-meter output connect the RSSI output of the receiver to the open leads on the Receiver Connector (see Figure 23). After you make this connection you must calibrate the S meter as described in the MPT Software User's Manual.

Frequency, volume, and squelch settings must be made from the front panel of the receiver.

Chapter 7

USING THE MPT AS A SLAVE PROCESSOR

Multiple DDF7000 direction finding processors can share a common antenna. A block diagram of two DDF7000 processors sharing one antenna is shown below.

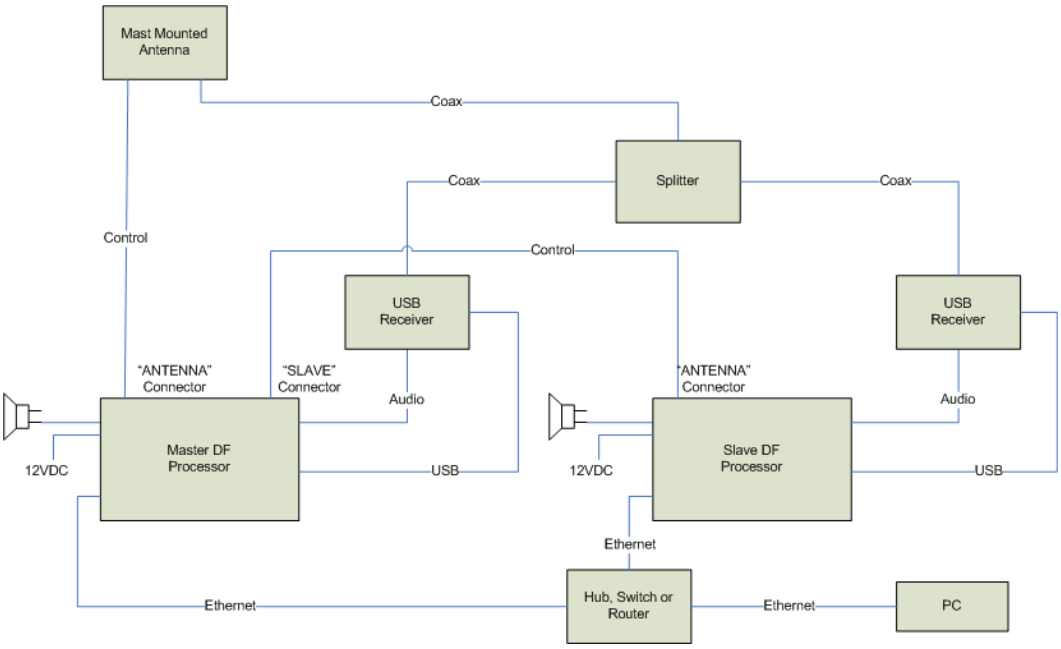

To share a common antenna

- One DDF7000 processor must be configured as a master (DDF7001) and all other processors must be configured as slaves (DDF7002)
- You must have a receiver for each processor
- A splitter is required to route the RF signal from the antenna to each receiver.

This document describes how to change a master processor (DDF7001) to a slave processor (DDF7002) and offers some guidance to using the processors behind a firewall.

CHANGING THE PROCESSOR TO THE SLAVE CONFIGURATION

If you purchased your processor as a DDF7002 it is already configured as a slave. A small black on white sticker with an S on it will be attached to your processor. However, you can convert any master processor to a slave processor or vice versa.

1. Turn the processor box over and remove the four screws that hold on the cover.
2. Remove the cover and set it aside with the screws.
3. Change the position of jumper J5 from the master to the slave position (see the photos below).

J5 in master position

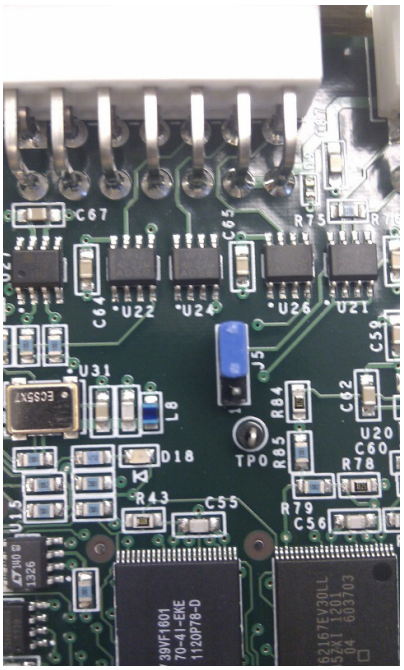

J5 in slave position

4. Replace the cover, insert and tighten the four cover screws.

CONNECTING THE SLAVE TO THE MASTER

The slave processor is shipped with a slave cable. If you are attempting to convert a master processor to a slave processor in the field, contact the factory to purchase one of these cables.

1. Connect the cable from the Slave output of the master processor (8 pin connector) to the Antenna input of the slave processor (14 pin connector)

2. Connect the cable from the antenna to the splitter input and connect each receiver to an output of the splitter.

3. Make all other connections as you would normally to the processor.

OPERATION BEHIND A FIREWALL

If you are going to use the master-slave configuration behind a firewall and you need make IP connections from outside the firewall, you must assign a static IP address and a unique IP port to each processor. Once you've done this use your router to port forward the IP addresses of the processors to allow access from outside the firewall. Use the MPT User Interface or the web browser interface to change the IP address and IP port of the processor. Instructions for doing this are given in the MPT Software Users Guide and the help file for the MPT User Interface software.

Chapter 8

CONFIGURING THE DIRECTION FINDER

The software configuration of the DDF7001 is described in the MPT Software User's Manual and the help file that is installed with the MPT User Interface software. Refer to these resources to learn how to adjust the direction finder settings.

Chapter 9

INTERFACING TO THE DDF7001 DIRECTION FINDER

This chapter is provided for the user that wants to develop their own software to interface with the DDF7001 direction finder. It describes the command and response interface and the audio streaming interface.

The RJ45 connector on the DDF7001 provides the Ethernet interface to the DDF7001 direction finder.

IN THIS CHAPTER

USING THE BINARY SERIAL INTERFACE

The binary serial interface is a telnet like interface that uses a TCP/IP connection to control and extract data from the DDF7001 direction finder. When shipped the default static IP address is 10.0.0.100 and the default IP port is 2101. Both the static IP address and the IP port can be changed using either the web server or the binary serial interface. The MPT UI software furnished with the DDF7001 utilizes binary serial interface.

COMMAND AND DATA STRUCTURE

Every DDF7001 command and the data coming from the DDF7001 conform to the data structure as shown in the following table.

Byte #	Definition	Comments
0	0x02	STX indicates the start of the message
1	Length (LSB)	LSB of the total length of the message (from byte 3 through byte n)
2	Length (MSB)	MSB of the total length of the message
3	Message ID (LSB)	LSB of the message identifier
4	Message ID (MSB)	MSB of the message identifier
5 - n	Message data	Any data sent with the message
n + 1	CRC (LSB)	LSB of CRC check sum
n + 2	CRC (MSB)	MSB of CRC check sum
n + 3	0x03	ETX indicates the end of the message

* CRC is defined as CRC16 standard using 8005 for the generating polynomial see "A Painless Guide to CRC Error Detection Algorithms". CRC is calculated on bytes 1 through n.

An example CRC algorithm written in the C language is shown in the listing below.

```
short CRCTable[] =
   {
   0x0000, 0xC0C1, 0xC181, 0x0140, 0xC301, 0x03C0, 0x0280, 0xC241, 0xC601,
0x06C0, 0x0780,
   0xC741, 0x0500, 0xC5C1, 0xC481, 0x0440, 0xCC01, 0x0CC0, 0x0D80, 0xCD41,
0x0F00, 0xCFC1,
   0xCE81, 0x0E40, 0x0A00, 0xCAC1, 0xCB81, 0x0B40, 0xC901, 0x09C0, 0x0880,
0xC841, 0xD801,
   0x18C0, 0x1980, 0xD941, 0x1B00, 0xDBC1, 0xDA81, 0x1A40, 0x1E00, 0xDEC1,
0xDF81, 0x1F40,
   0xDD01, 0x1DC0, 0x1C80, 0xDC41, 0x1400, 0xD4C1, 0xD581, 0x1540, 0xD701,
0x17C0, 0x1680,
   0xD641, 0xD201, 0x12C0, 0x1380, 0xD341, 0x1100, 0xD1C1, 0xD081, 0x1040,
0xF001, 0x30C0,
   0x3180, 0xF141, 0x3300, 0xF3C1, 0xF281, 0x3240, 0x3600, 0xF6C1, 0xF781,
0x3740, 0xF501,
   0x35C0, 0x3480, 0xF441, 0x3C00, 0xFCC1, 0xFD81, 0x3D40, 0xFF01, 0x3FC0,
0x3E80, 0xFE41,
   0xFA01, 0x3AC0, 0x3B80, 0xFB41, 0x3900, 0xF9C1, 0xF881, 0x3840, 0x2800,
0xE8C1, 0xE981,
   0x2940, 0xEB01, 0x2BC0, 0x2A80, 0xEA41, 0xEE01, 0x2EC0, 0x2F80, 0xEF41,
0x2D00, 0xEDC1,
```

```
   0xEC81, 0x2C40, 0xE401, 0x24C0, 0x2580, 0xE541, 0x2700, 0xE7C1, 0xE681,
0x2640, 0x2200,
   0xE2C1, 0xE381, 0x2340, 0xE101, 0x21C0, 0x2080, 0xE041, 0xA001, 0x60C0,
0x6180, 0xA141,
   0x6300, 0xA3C1, 0xA281, 0x6240, 0x6600, 0xA6C1, 0xA781, 0x6740, 0xA501,
0x65C0, 0x6480,
   0xA441, 0x6C00, 0xACC1, 0xAD81, 0x6D40, 0xAF01, 0x6FC0, 0x6E80, 0xAE41,
0xAA01, 0x6AC0,
   0x6B80, 0xAB41, 0x6900, 0xA9C1, 0xA881, 0x6840, 0x7800, 0xB8C1, 0xB981,
0x7940, 0xBB01,
   0x7BC0, 0x7A80, 0xBA41, 0xBE01, 0x7EC0, 0x7F80, 0xBF41, 0x7D00, 0xBDC1,
0xBC81, 0x7C40,
   0xB401, 0x74C0, 0x7580, 0xB541, 0x7700, 0xB7C1, 0xB681, 0x7640, 0x7200,
0xB2C1, 0xB381,
   0x7340, 0xB101, 0x71C0, 0x7080, 0xB041, 0x5000, 0x90C1, 0x9181, 0x5140,
0x9301, 0x53C0,
   0x5280, 0x9241, 0x9601, 0x56C0, 0x5780, 0x9741, 0x5500, 0x95C1, 0x9481,
0x5440, 0x9C01,
   0x5CC0, 0x5D80, 0x9D41, 0x5F00, 0x9FC1, 0x9E81, 0x5E40, 0x5A00, 0x9AC1,
0x9B81, 0x5B40,
   0x9901, 0x59C0, 0x5880, 0x9841, 0x8801, 0x48C0, 0x4980, 0x8941, 0x4B00,
0x8BC1, 0x8A81,
   0x4A40, 0x4E00, 0x8EC1, 0x8F81, 0x4F40, 0x8D01, 0x4DC0, 0x4C80, 0x8C41,
0x4400, 0x84C1,
   0x8581, 0x4540, 0x8701, 0x47C0, 0x4680, 0x8641, 0x8201, 0x42C0, 0x4380,
0x8341, 0x4100,
   0x81C1, 0x8081, 0x4040
   };

// DESCRIPTION:   Calculates the CRC-16 value of a buffer of data
//
// INPUT:         *data       Pointer to the data buffer
// INPUT:         NumBytes    Number of bytes to read for CRC

short CalcCRC16 (char *Data, short NumBytes)
{
   unsigned int   i;
   u8  CRCLoByte;
   u16 CRCResult;

   CRCResult = 0x0000;
   for (i = 0; i < NumBytes; i++)
   {
      CRCLoByte = (u8)(CRCResult & 0x00FF);
      CRCResult = ((CRCResult & 0xFF00) >> 8) ^ CRCTable[*Data++ ^
CRCLoByte];
   }

   return CRCResult;
}
```

COMMANDS

The following table defines the commands that can be sent to the DDF7001. The DDF7001 responds by echoing back the command with the value that was accepted by the DDF7001. If the DDF7001 did not accept the command then nothing will be echoed back. Items marked in bold are the default settings. All data is sent in little Endian format (lowest order byte sent first)

Command Name	Command Number	Data Length	Range	Comments
Sweep Rate	0x0001	byte	0-4	0=250,1=500.**2=1000**,3=2000
Averages	0x0002	byte	1-20	**Default is 2**
Attenuator	0x0003	byte	0 – 1	**0 = off**, 1 = on
Audio Volume	0x0004	byte	0 – 96	0 = max volume, 96 = muted, **default 20**
Reserved for future use	0x0005			
Receiver Type	0x0006	byte	0 – 4	0 = ICOM R8500 1 = ICOM PCR1500 **2 = ICOM PCR2500** 3 = AOR AR8600 4 = AOR AR5000 If the receiver requires a serial port and no serial port has been assigned for the receiver then serial port 0 will be assigned to the receiver
Sample Time	0x0007	short	10 – 10000	Sample time in ms Maximum value 1500 ms **Default 500 ms**
Reserved for future use	0x0008			
Threshold	0x0009	short	10 – 10000	Sets the maximum separation of consecutive bearing measurements that will be used in the bearing calculation. Setting this number low will result in some missed bearings. Setting it high will result in more false positives. **Default 4000**
Antenna	0x000A	byte	0 = VHF 1= UHF 2 = THF **3= Auto**	In Auto mode the antenna switches will be controlled by the receiver frequency as shown below (receiver frequency must be controlled by the direction finder) 100 < f < 250 MHz - VHF Antenna 250 ≤ f < 500 MHz – UHF Antenna 500 ≤ f < 1000 MHz – THF antenna

Reserved for future use	0x000B			
Direction Cosines	0x000C	4 INT16	-10000 - 10000	Range is -1 to 1 (divide by 10000) Each receiver has calibrated direction cosines. Typically the user does not need to change these
Calibrate	0x000D	INT16	0 – 3599	Range is 0-359.9 (divide by 10) Calibrate the bearing to a given angle
Identify Hardware	0x000E	0		Causes hardware version response
Identify Software	0x000F	0		Causes software version response
List Serial Ports	0x0010	0		Lists each serial port connected to the system and its parameters. The serial ports correspond to USB-to-serial converters connected to the DDF7001.

Configure Serial Port	0x0011	6 bytes	Byte 0 : port number (0 - 3) Byte 1 : Baud Rate 0 = 1200 1 = 2400 **2 = 4800** 3 = 9600 4 = 19200 5 = 38400 Byte 2 : Stop Bits **0 = 1** 1 = 1.5 2 = 2 Byte 3 : Data Bits 0 = 7 **1 = 8** Byte 4 : Parity **0 = none** 1 = even 2 = odd	The DDF7001 supports up to a 4 port USB-to-serial converter.
Assign Serial Port	0x0012	2 bytes	Byte 0 : port number Byte 1 : device **0 = NMEA** 1 = Receiver 2 = pass through	Port number 0 – 3 Pass through means all data flows from the serial port to the Ethernet port and vice versa.
Send DF Settings	0x0013	0		Causes DF settings response
Set Frequency	0x0014	UINT32	0 – 2000000000 (2 GHz)	Hz
Set Squelch	0x0015	byte	0 – 255	**Default 0**
Set Rx Volume	0x0016	byte	0 – 255	**Default 128**

Receiver Pass Through	0x0017	Various		Sends command directly to receiver
Sweep	0x0018	byte	Nibble 0 : Direction 0 = CW 1 = CCW Nibble 1: Sweep State 0 = Sweep Off 1 = Sweep On	Manual command to start the sweep Used in factory testing. Not recommended for use by user.
Calibrate S Meter	0x0019	byte	0 – 9	Callibrates S-meter to the level indicated. Works only with receivers having an analog RSSI output
Filter	0x001A	byte	0 = Off, **1 = On**	Enables or disables the audio filter that removes the antenna sweep rate tone
Reserved for future use	0x001B			
Hold Time	0x001C	byte	Hold time in seconds	Time DF holds the bearing calculation DF Sends 360 when hold time expires **Default 5 seconds**
DHCP	0x001D	byte	0 = do not use DHCP **1 = use DHCP**	
IP Address	0x001E	4 bytes	Sets the IP Address	If using DHCP this sets the default IP address. **Default 10.0.0.100**
IP Gateway	0x001F	4 bytes	Sets the IP Gateway	**Default 255.0.0.0**
IP Subnet Mask	0x0020	4 bytes	Sets the IP Subnet Mask	**Default 10.0.0.1**
IP DF Port	0x0021	UINT16	Sets the port for the DF communications	**Default 2101**
Send Rx Settings	0x0022	0	Gets the frequency, volume, and squelch settings	
Set to Default	0x0023	0	Sets all parameters to their default values (IP parameters excluded)	
Reset Processor	0x0024	0	Restarts the processor (All ip connections will be terminated)	
Reserved	0x0025			

Serial Pass Through	0x0026	Various	byte 0: port Number remaining bytes serial port data	
Send Serial Number	0x0027	0	Sends the serial number of the unit	
Stream Audio	0x0028	UINT16	Port number to stream audio to 0 = disable streaming	
Streaming Audio Squelch	0x0029	UINT16	Audio must exceed squelch level in order for audio to be streamed	**Default 50**
Compress Audio	0x002A	UINT8	**0 = no compression** 1 = A law compression	

RESPONSES

With the exception of commands that specifically ask for data to be sent the response to a command is that it will echo the data back in the exact format it was sent with the actual settings of the DDF7001.

The following table defines responses from the DDF7001

Response Name	Response Number	Format	Comments
Bearing Message	0x0000	ASCII	Comma delimited string Bearing (0-359.9), S meter (0-255), Number of Averages (1-20), Audio Level (0-2047) UTC Timestamp (if GPS receiver is connected) Latitude (if GPS receiver is connected) (100 if latitude not detected) Longitude (if GPS receiver is connected) (190 if longitude not detected) Heading (if GPS receiver is connected) (-1 if no heading is available) Direction of Rotation (if averages are set to 1)
Identify Hardware	0x000E	ASCII	String will be of the form major version .minor version
Identify Software	0x000F	ASCII	String will be of the form major version .minor version
Direction Cosines	0x000C	16 Bytes	Bytes 0-3 10000 * cos theta CW Bytes 4-7 10000 * sin theta CW Bytes 8-11 10000 * cos theta CCW Bytes 12-15 10000 * sin theta CCW All in Little-Endian format
List Serial Ports	0x0010	ASCII	Comma separated list of the connected port data Port Number (0-3), Status, Baud Rate (1200 – 38400), Data bits (7 or 8) Stop bits (1, 1.5, or 2 Parity (N = None, O=Odd, E=Even, M=Mark, S=Space, Function (NMEA,RECEIVER,PASS THROUGH) Each set of port parameters is separated by a carriage return character
Send DF Settings	0x0013	ASCII	Settings will be sent as a block of ASCII data with each setting having the following format

			Cmd number,setting<CR>
S Meter Cal Constants	0x0019	ASCII	Two comma separated strings representing the slope and intercept constants in exponent format (e.g. 1.23e-1,1.045e3)
Receiver Data	0x0017	Bytes	Data received from the receiver that is passed through the DDF7001
RX Settings	0x0022	ASCII	Settings will be sent as a block of ASCII data with each setting having the following format Cmd number,setting<CR>
Serial Port Data	0x0026	Bytes	Data from the serial ports when serial port is configured as a pass through port Byte 0 = port number Remaining bytes is the message
Serial Number	0x0027	ASCII	Serial number

AUDIO INTERFACE

The DDF7001 digitizes the receiver audio and can stream it via UDP. Once a TCP/IP connection is made the controller sends a Stream Audio (0x0028) command to the DDF7001 signaling the DDF7001 as to which port to use to stream the audio. Once this command is received the DDF7001 will stream the audio when the audio level exceeds the audio squelch threshold. This threshold can be set via the command interface.

Compression

The audio can be sent compressed or uncompressed depending on the preference of the programmer. When compressed A-law compression is used. The algorithm for decompressing the audio is shown below. If uncompressed audio is streamed then a maximum of 4 connections is allowed. Compressed audio allows up to 8 streaming connections.

```
short decode(byte alaw)
{
    //Invert every other bit, and the sign bit (0xD5 = 1101 0101)
    alaw ^= 0xD5;
    //Pull out the value of the sign bit
    int sign = alaw & 0x80;
    //Pull out and shift over the value of the exponent
    int exponent = (alaw & 0x70) >> 4;
    //Pull out the four bits of data
    int data = alaw & 0x0f;

     //Shift the data four bits to the left
     data <<= 4;
     //Add 8 to put the result in the middle of the range (like adding a
half)
     data += 8;

     //If the exponent is not 0, then we know the four bits followed a 1,
     //and can thus add this implicit 1 with 0x100.
     if (exponent != 0)
         data += 0x100;
     /* Shift the bits to where they need to be: left (exponent - 1) places
     * Why (exponent - 1) ?
     * 1 2 3 4 5 6 7 8 9 A B C D E F G
     * . 7 6 5 4 3 2 1 . . . . . . . . <-- starting bit (based on exponent)
     * . . . . . . . Z x x x x 1 0 0 0 <-- our data (Z is 0 only when
exponent is 0)
     * We need to move the one under the value of the exponent,
     * which means it must move (exponent - 1) times
     * It also means shifting is unnecessary if exponent is 0 or 1.
     */
     if (exponent > 1)
          data <<= (exponent - 1);

     return (short)(sign == 0 ? data : -data);
 }
```

INDEX